Backscatter and Ambient Communication

Yifei Liu

Outline

1. Introduction
2. Ambient Backscatter
3. WiFi Backscatter
4. Passive WiFi Backscatter

Outline

1. Introduction
2. Ambient Backscatter
3. WiFi Backscatter
4. Passive WiFi Backscatter

Introduction

- Backscatter: The reflection of signals waves back to direction from which they came.
- Complex computing function unit are increasingly embedded in tiny applications such as wristband, medical devices. But there is no more room for wires and batteries.
- System harvests power in whole band for computation and communication.
- A new communication primitive where devices communicate by backsttering ambient WiFi Signals.

Concept of Backsctter

- Reflect existing signals in a way to transmitted information:
  Inductive modulation: low frequency
  Backscatter modultion: high frequency
- Commonly used by RFID:
  Limited computation in RFID chip.

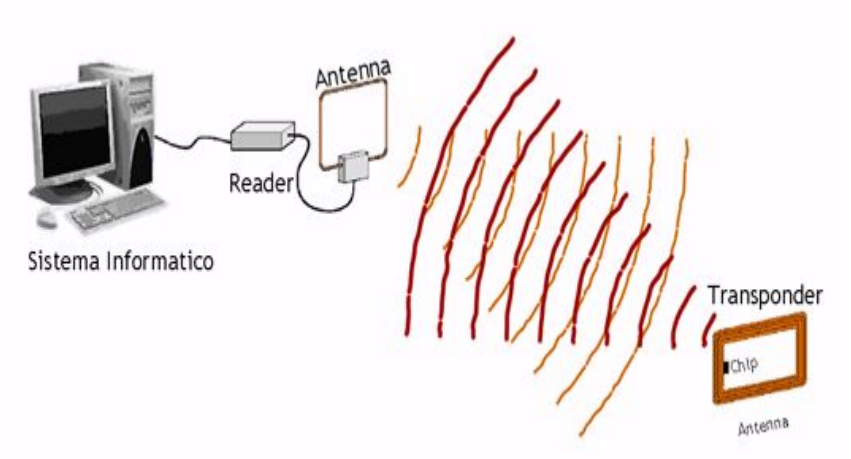

Image credit: http://www.erplan.it/rfid/

Outline

1. Introduction
2. Ambient Backscatter
3. WiFi Backscatter
4. Passive WiFi Backscatter

Ambient Backscatter: Introduction

Similiar to RFID but

1. Doesn't require specific power infrastrucure.
2. Works by modulating the reflection of an existing RF signal.
3. No intereference with legacy devices.
4. Backscattering is achieved by changing the impedance of a antenna in the presence of an incident signal.

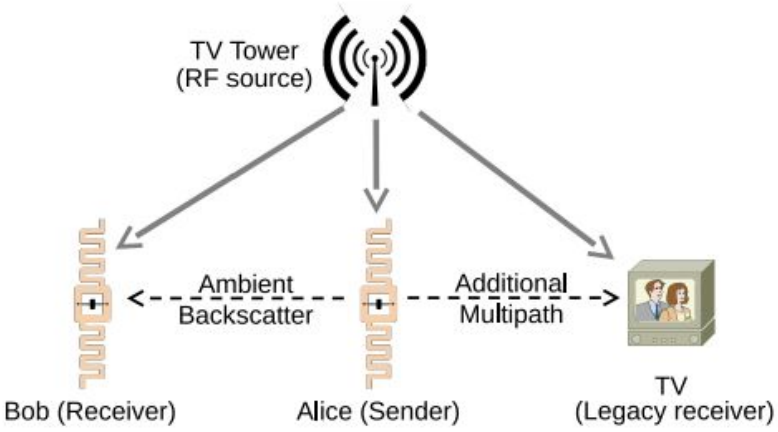

Ref: Ambient Backscatter: Wireless Communication Out of Thin Air. Bjarni Benediktsson 24.02.2015

Ambient Backscatter: Challenge

1. The ambient signals are controlled by the sender, TV, WiFi, etc.
   a) Variational signal
   b) Signal encoded

Solution: slow down the ambient signal. How?

a) Average the received signal across multiple samples.

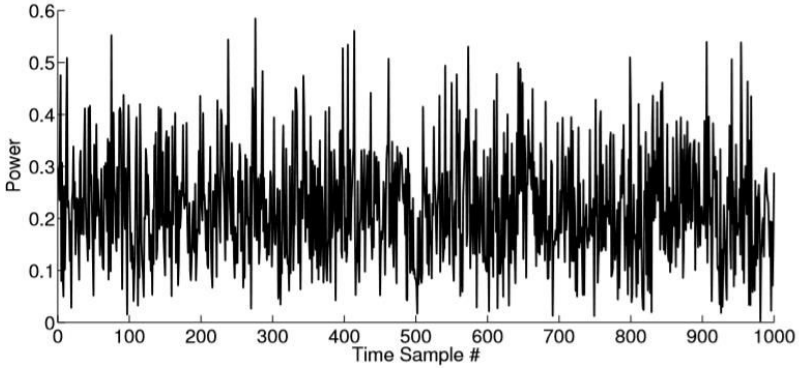

(a) Original TV plus Backscatter signal

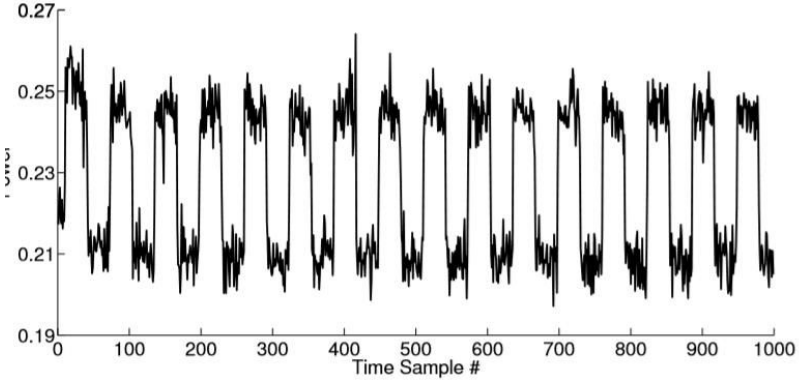

Ambient Backscatter: Challenge

2. Averageing digital samples requires data conversion (A/D): energy costive.
   Solution: Use RC circuit.

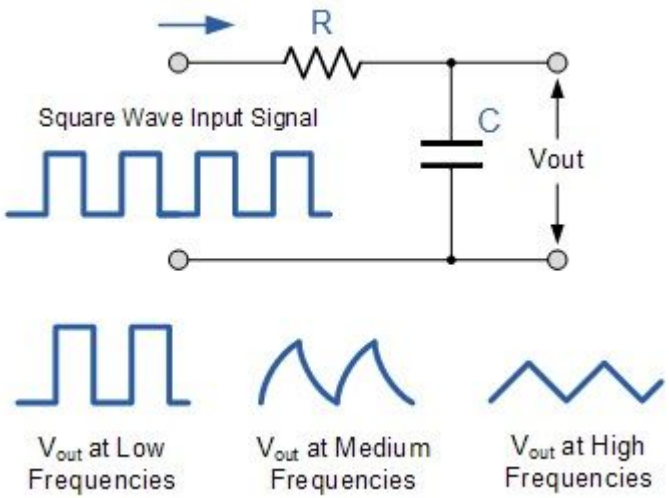

Image credit: https://forum.allaboutcircuits.com/threads/dac-glitch-rc-filter-and-glitch-energy.110934/

Ambient Backscatter: Challenge

3. Collision if many devices need to share the channel.
   Solution:
   a) Devices can decode each other's transmissions.
   b) Energy detection by leveraging the property of the analog comparator.

$$D = 1 - \frac{|\#ones - \#zeros|}{\#ones + \#zeros}$$

Detection equation

Ambient Backscatter: System Diagram

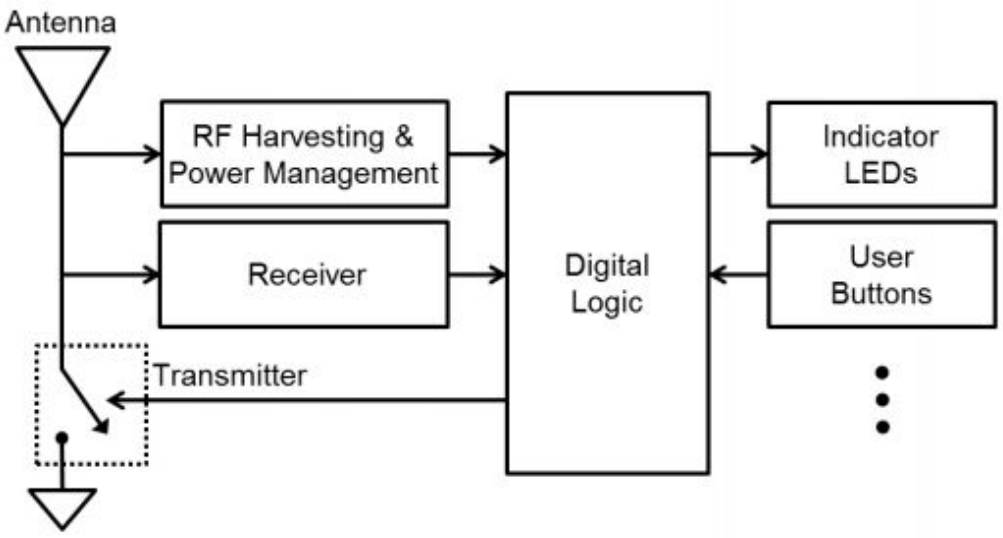

- The transmitter, receiver, and the harvester are all connected to a single antenna and use the same RF signals.
- The harvester collects energy from the ambient signals and uses it to provide the small amount of power required for communication and to operate the sensors and the digital logic unit.
- Backscatter transmitter includes a switch that modulates the impedance of the antenna and causes a change in the amount of energy reflected by the antenna.

Ambient Backscatter: Prototype

- Battery free.
- Harvest energy from TV signals at 539mHz
- 1Kps at 76cm
- MSP430 controller

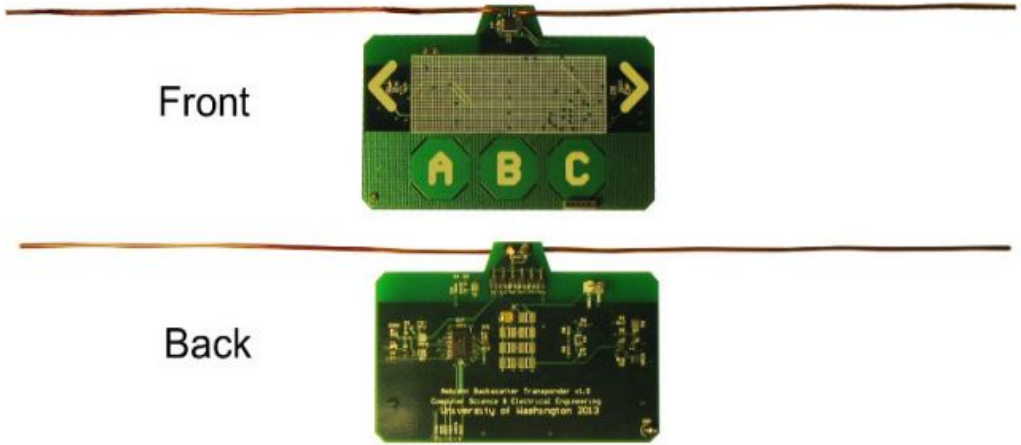

Power Consumption of Analog Components

	Tx	Rx
Ambient Backscatter	0.25uW	0.54uW
Traditional Backscatter	2.32uW	18uW

Outline

1. Introduction
2. Ambient Backscatter
3. WiFi Backscatter
4. Passive WiFi Backscatter

WiFi Backscatter: Motivation and Challenes

Motivation:

WiFI connectivity for low power devices.

Challenges:

- WiFi transmission require much more energy than other RF applications.
- WiFi devices can only access WiFi signals.

Wi-Fi AP

Wi-Fi Device

Changing reflections consumes 0.65 µW of power

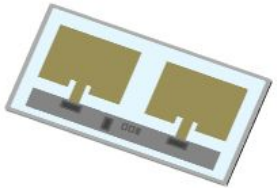

Wi-Fi Backscatter Tag

Ref: “Wi-Fi Backscatter: Internet Connectivity for RF-Powered Devices”, Bryce Kellogg, etc

WiFi Backscatter: Components

- Three Actors:
  - WiFI reader (WiFi device)
  - WiFi helper (AP)
  - WiFi backscatter tags
- Two connection link:
  - Downlink: Reader to Tag
  - Uplink: Tag to Reader

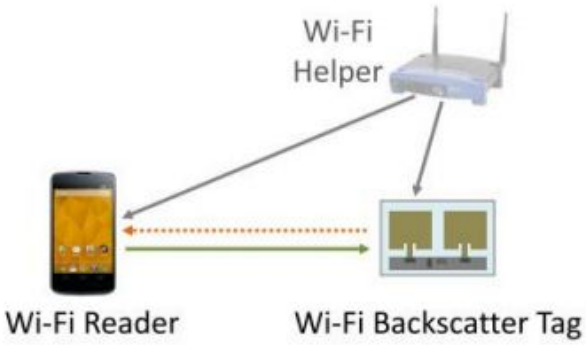

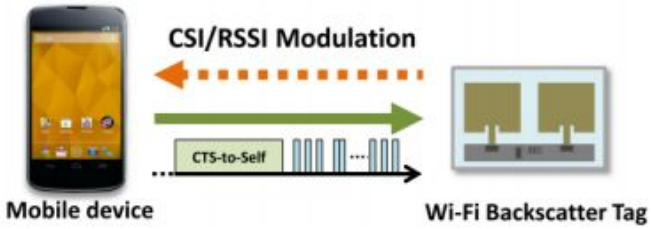

WiFi Backscatter: Uplink

- Modulation: Transmit data by modulating the WiFi channel
  Reflected signal depends on the antenna's impedence.
  Modulates only when queried by reader.
  Doesn't change the channel within every WiFi Packet.
- CSI extratction:
  1. Moving average filter to remove temporal variations.
  2. Use correlation with preamble to find out good sub-channels.
  3. Use weighted average to combine sub-channel information.
- CSI decoding:
  Apply simple threshold on the weighted CSI
- Decoding using RSSI:
  Choose channel with max correction value

WiFi Backscatter: Downlinks

Challenges:

- Wifi Reader can only transmit Wi-Fi packets.
- Tag cannot decode WiFi transmissions.

Solution

- Encode information with the presence and absence of Wi-Fi packets.
- Circuit in tag can detect energy during a packet transmission

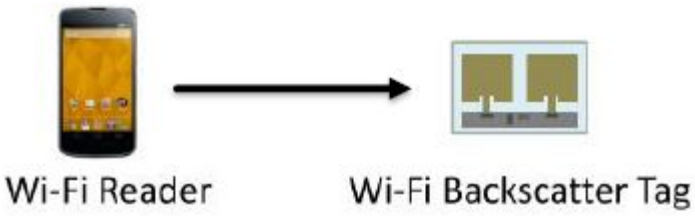

WiFi Backscatter: Implementation

- Uplink: How to work with WiFi network?
  Solution: be agnostic to WiFi traffic.

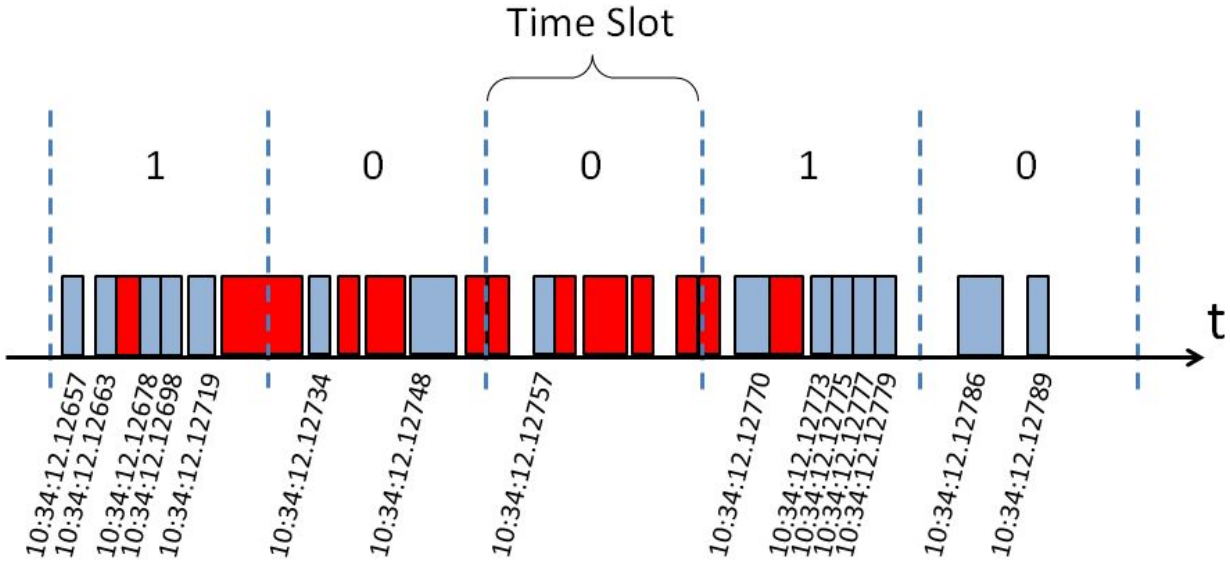

Use Wi-Fi timestamp to reconstruct bits

WiFi Backscatter: Implementation

- Downlink: How to send data to the tag?
  Solution: Encode data as presence/absence f WiFi packect

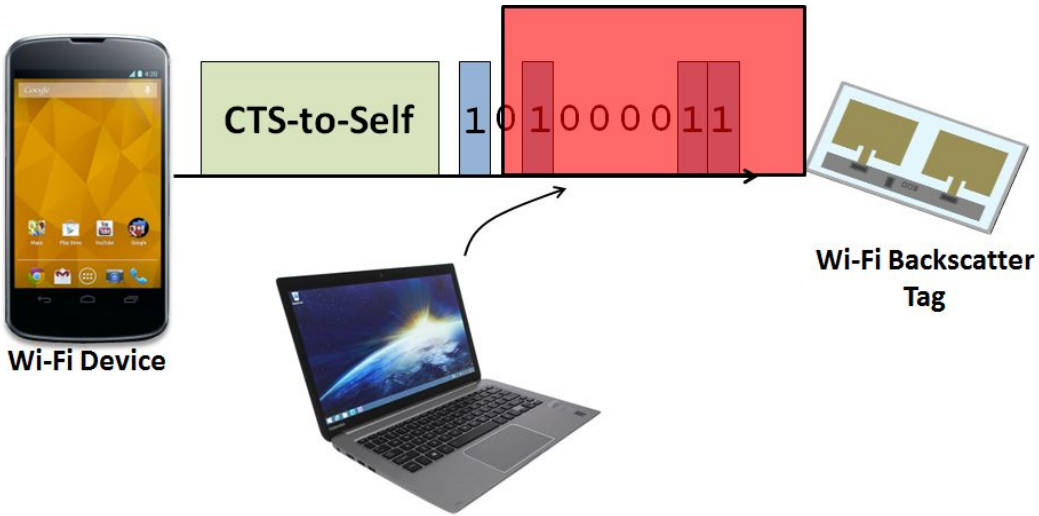

WiFi Backscatter: Implementation

- Downlink: How the tag is detecting these Wi-Fi Packets.
  Solution: 2. Low power packtect dection based on OFDM PAR.

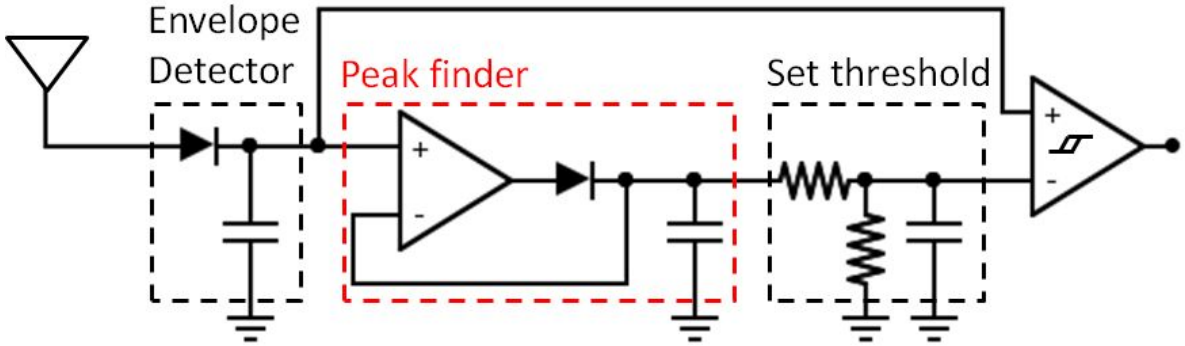

Can detect packets as short as 50 μs
Consumes μWs of power

WiFi Backscatter: Implementation

- How to deal with multi TAGS?
  Solution: 1. WiFi device act as a central coordinator.
  2. None of tags transmit concurrently

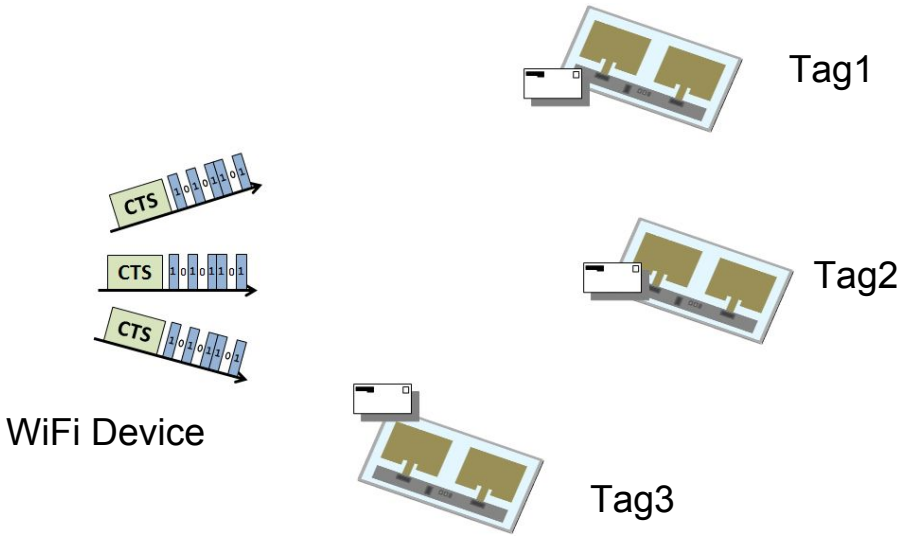

WiFi Backscatter: Prototype

Intel 5300 Wi-Fi Cards

2.4G WiFi channel with RSSI and CSI

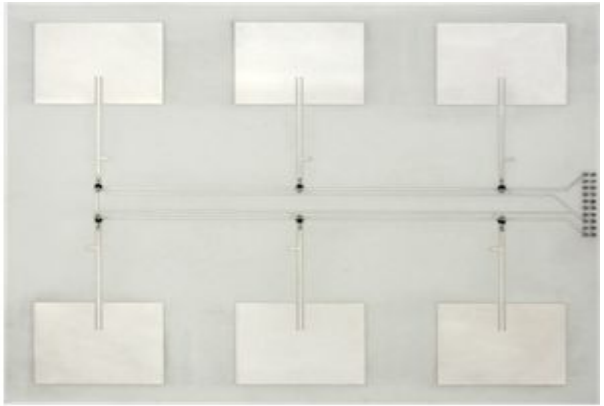

Wi-Fi Backscatter Prototype

MSP430	RF switch	Peak Finer
5uW	0.65uW	9.0uW

Uplink: 2.2 meters, 1kps
Downlink: 3.0 meters, 20kbps

Outline

1. Introduction
2. Ambient Backscatter
3. WiFi Backscatter
4. Passive WiFi Backscatter

Passive WiFi Backscatter: Introduction

Key idea:

- Decouple the baseband digital logic from the power-consuming RF components.
- Perform coding and modulation in baseband.
- Create 802.11b transmissions by reflecting or absorbing the tone using digital switch.

Plugged -in device Tag

Ref: Passive Wi-Fi: Bringing Low Power to Wi-Fi Transmissions. Bryce Kellogg

Passive WiFi Backscatter: Chanllegs

- Interference between backscattered signal and plug-in device.
  Solution:
  1. Traditional system uses a full-duplex radio.
  2. Set the plugged in device's frequency outside the desired WiFi channel.

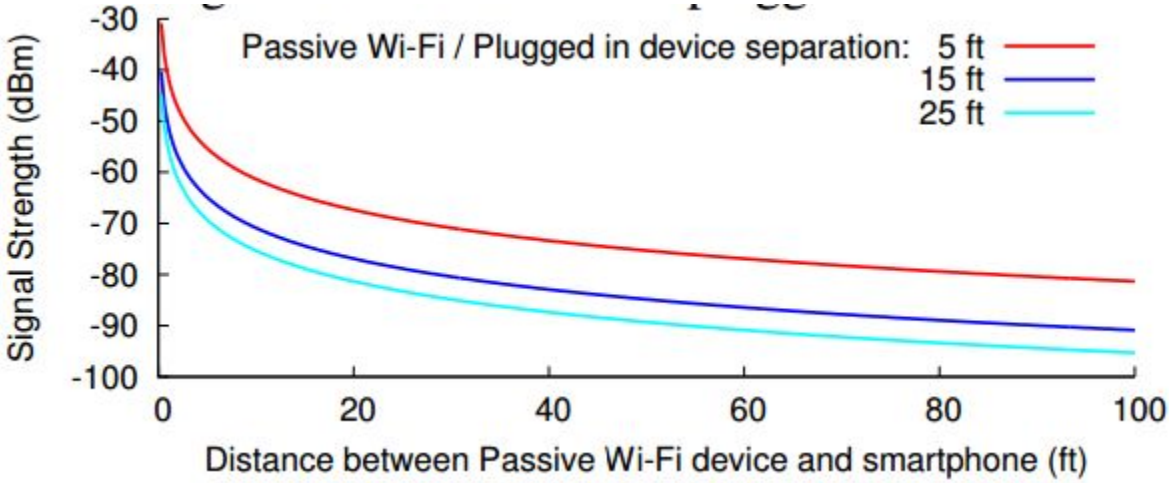

Passive WiFi Backscatter: Challenges

- Create 802.11b transmissions using backscatter.
  Solution:
  1. Shift the out-of-band tone from plugged-in device to desied channel. Sinusidal signal multiplication.
  2. Use DSSS and CCK encoding on top of DBPSK and DQPSK modulation.
  3. Approximate a digital suqare as sinusoid and modulate phase.

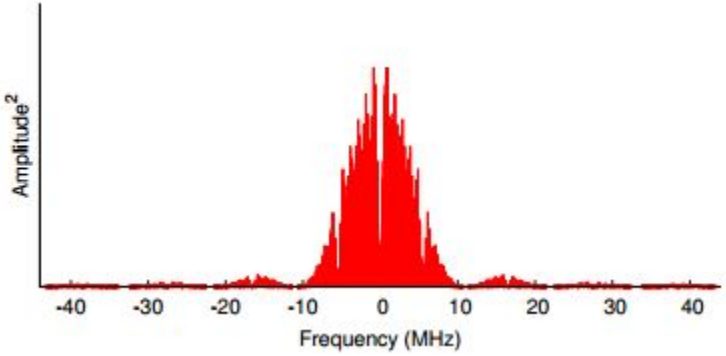

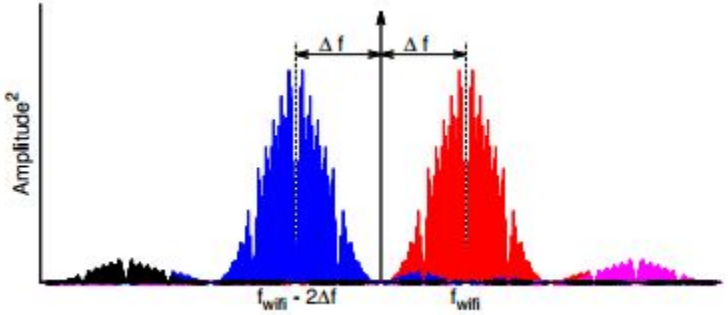

Challenges

- Sharing the WiFi network.
  Solution:
  1. Delegate the task of carrier sense to the plugged-in device.
  2. Share the ISM band.
  3. ACK and re-transmission

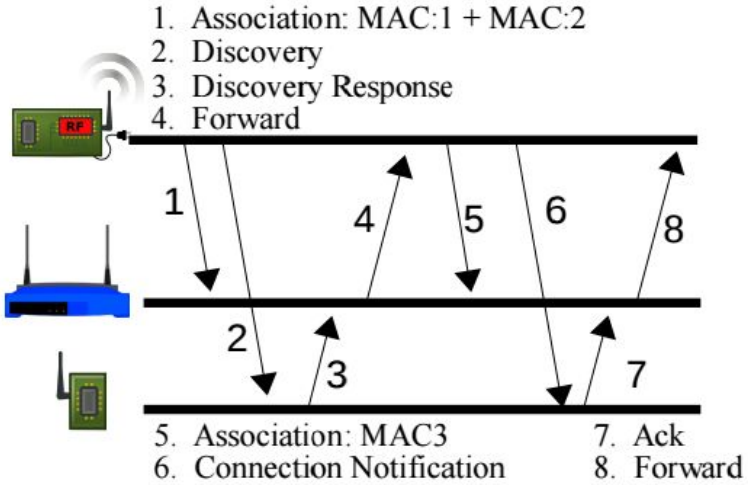

Implementation

- FPGA Prototype:
  - Altera Cyclone II
  - Custom backscatter switch
  - 2-11 Mbps WiFi and 250 kbps Zigbee IC

- Implementation
  - Verilog baseband, RF switch, custom PLL
  - TSMC 65nm Lower power Process
  - 28 μW at 2 Mbps

	1 Mbps	**11 Mbps**
Baseband Frequency Synthesizer	5.6 μW	5.6 μW
Baseband Processor	5.0 μW	48 μW
Backscatter Modulator	3.9 μW	5.6 μW
Total Power	14.5 μW	59.2 μW

Questions?