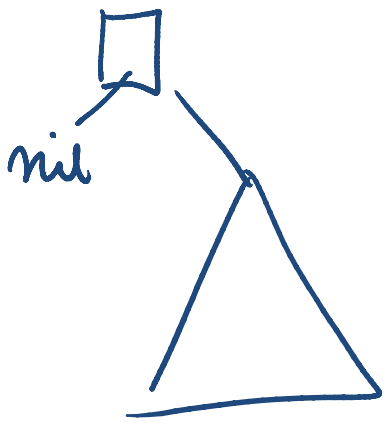

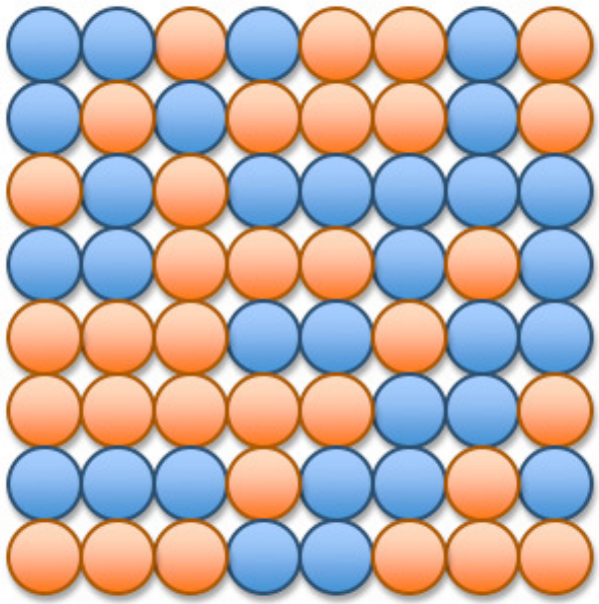

UNIT 8B

Computer Organization: Levels of Abstraction

Announcements

- Midsemester grades will be assigned this weekend
- Ps7 is due ~~Friday~~ Wed March ~~22~~ 20 in class
- Pa7 will be assigned shortly (due after break)

Pa6 – due tomorrow

Abstraction

- We can use layers of abstraction to hide details of the computer design.
- We can work in any layer, not needing to know how the lower layers work or how the current layer fits into the larger system.

  -> transistors
  -> gates
  -> circuits (adders, multiplexors, flip-flops)
  -> central processing units (ALU, registers, control)
  -> computer

Central Processing Unit (CPU)

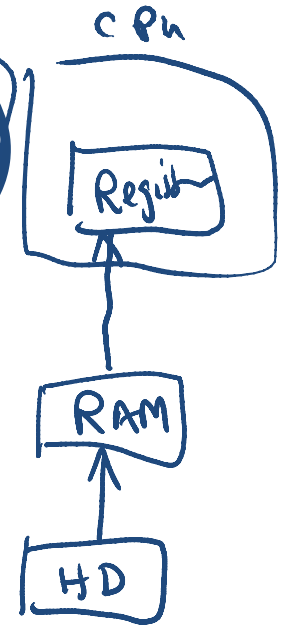

- A CPU contains:
  - Arithmetic Logic Unit to perform computation
  - Registers to hold information
    - Instruction register (current instruction being executed)
    - Program counter (to hold location of next instruction in memory)
    - Accumulator (to hold computation result from ALU)
    - Data register(s) (to hold other important data for future use)
  - Control unit to regulate flow of information and operations that are performed at each instruction step

IR

A=B+C → load B, R1
load C, R2
add R1, R2, R3
Store R3, A

R3 = R1 + R2

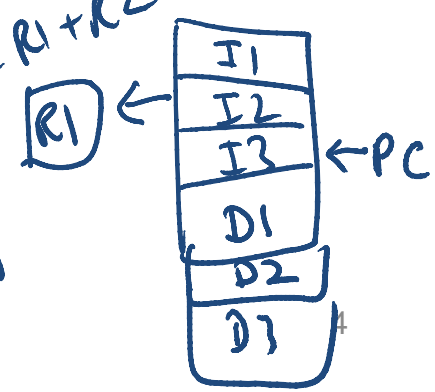

A sample CPU

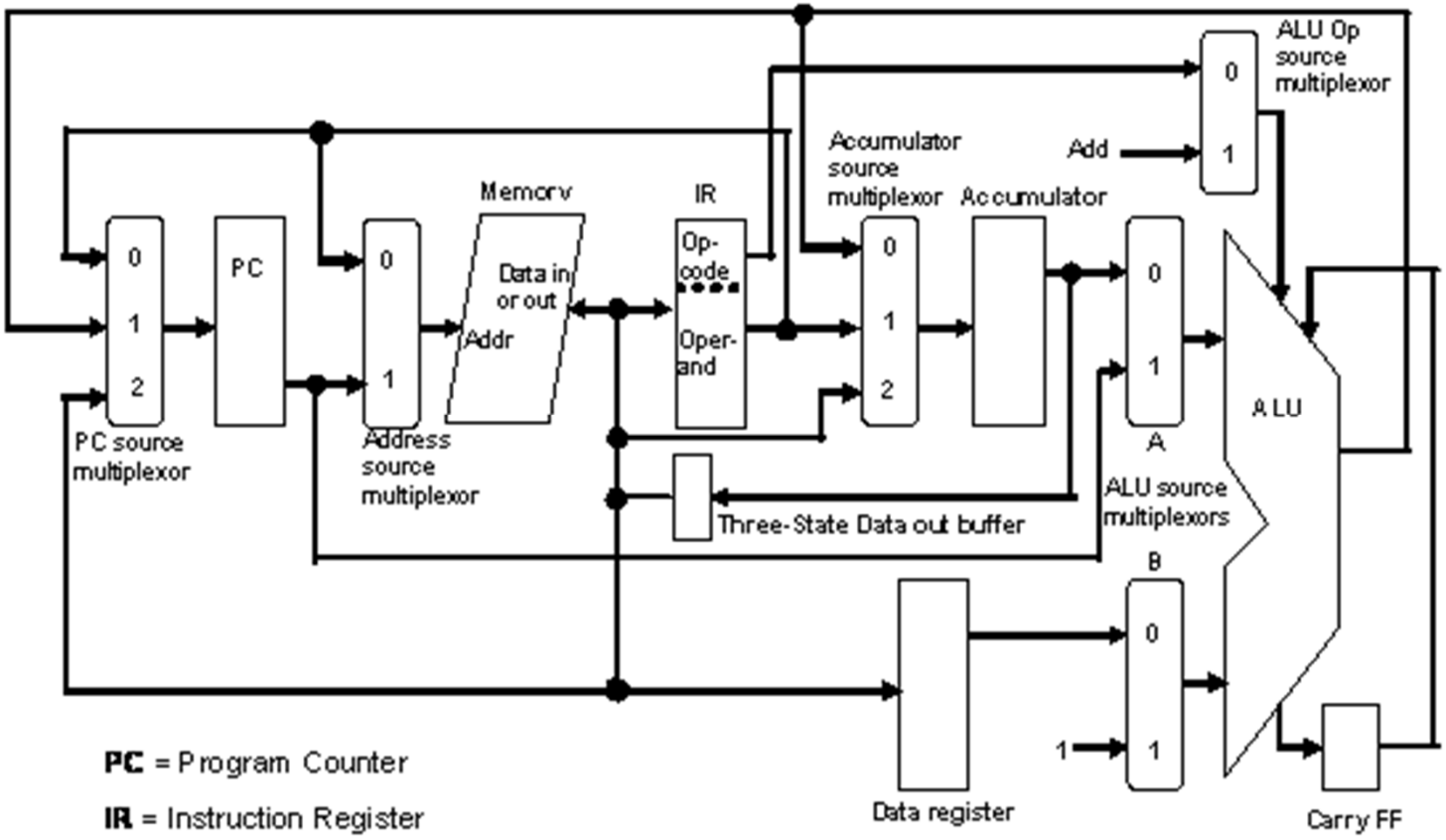

http://cpuville.com/main.htm

Computer

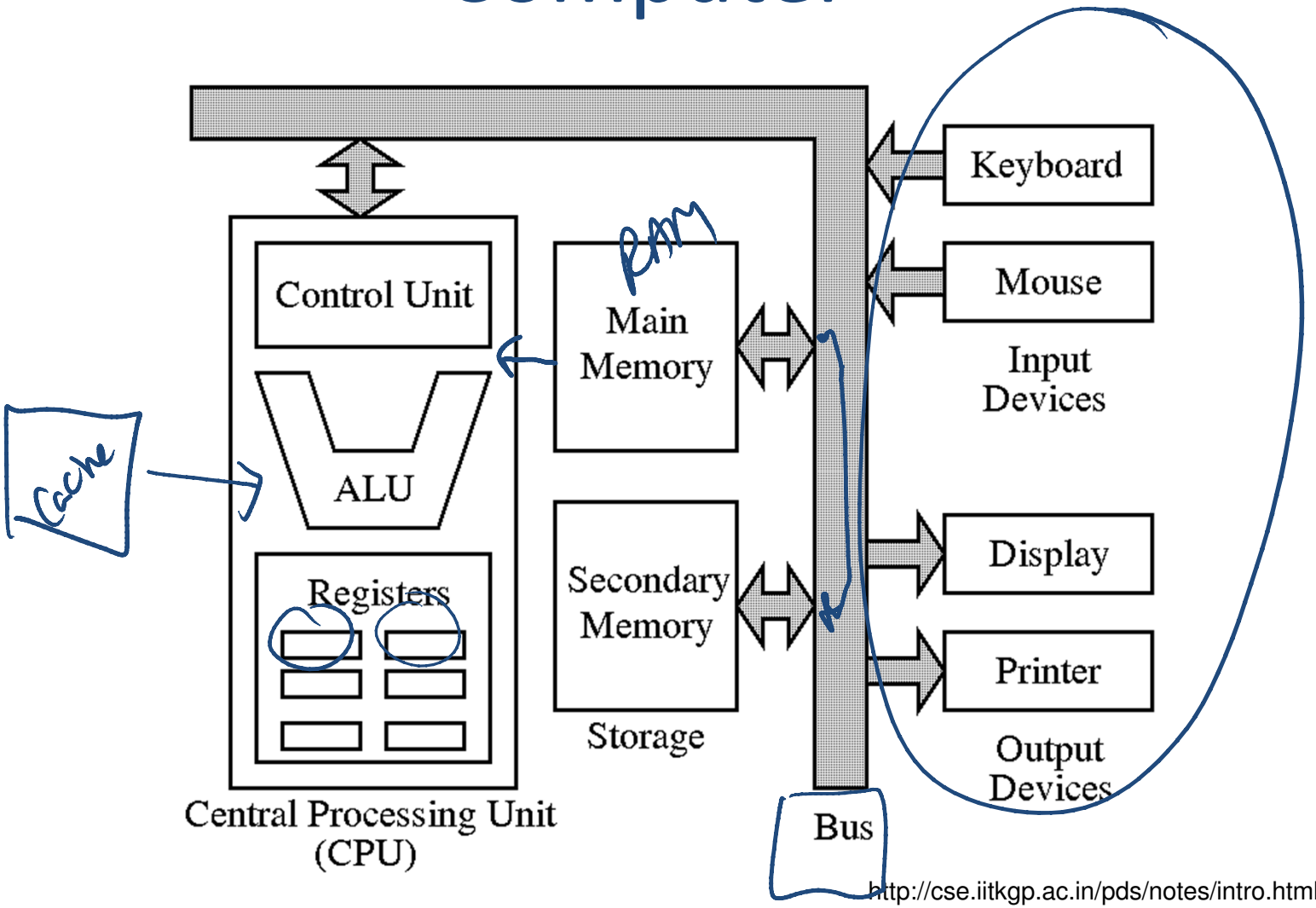

http://cse.iitkgp.ac.in/pds/notes/intro.html

To Gates

Properties (Similar to × and +)

- Commutative: $a \wedge b = b \wedge a$ $\quad a \vee b = b \vee a$
- Associative: $a \wedge b \wedge c = (a \wedge b) \wedge c = a \wedge (b \wedge c)$
  $a \vee b \vee c = (a \vee b) \vee c = a \vee (b \vee c)$
- Distributive: $a \wedge (b \vee c) = (a \wedge b) \vee (a \wedge c)$
  $a \vee (b \wedge c) = (a \vee b) \wedge (a \vee c)$ ← Not true for + and ×
- Identity: $a \wedge 1 = a$ $\quad a \vee 0 = a$
- Dominance: $a \wedge 0 = 0$ $\quad a \vee 1 = 1$
- Idempotence: $a \wedge a = a$ $\quad a \vee a = a$
- Complementation: $a \wedge \neg a = 0$ $\quad a \vee \neg a = 1$
- Double Negation: $\neg \neg a = a$

equivalence

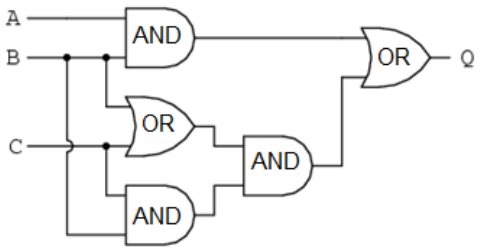

$Q = (A \wedge B) \vee ((B \vee C) \wedge (C \wedge B))$

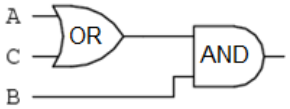

$Q = B \wedge (A \vee C)$

More gates

$S = A \oplus B$

A	B	A nand B	A nor B	A xor B	A or B
0	0	1	1	0	0
0	1	1	0	1	1
1	0	1	0	1	1
1	1	0	0	0	1

A = 0 0 1 1
+ + +
B = 0 1 0 1
S = 0 1 1 0

C = 1

NAND

- nand ("not and"): A nand B = not (A and B)

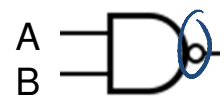

$\neg(A \wedge B)$

- nor ("not or"): A nor B = not (A or B)

NOR

$\neg(A \vee B)$

- xor ("exclusive or"):
  A xor B = (A and not B) or (B and not A)

$A \oplus B$

All Gates

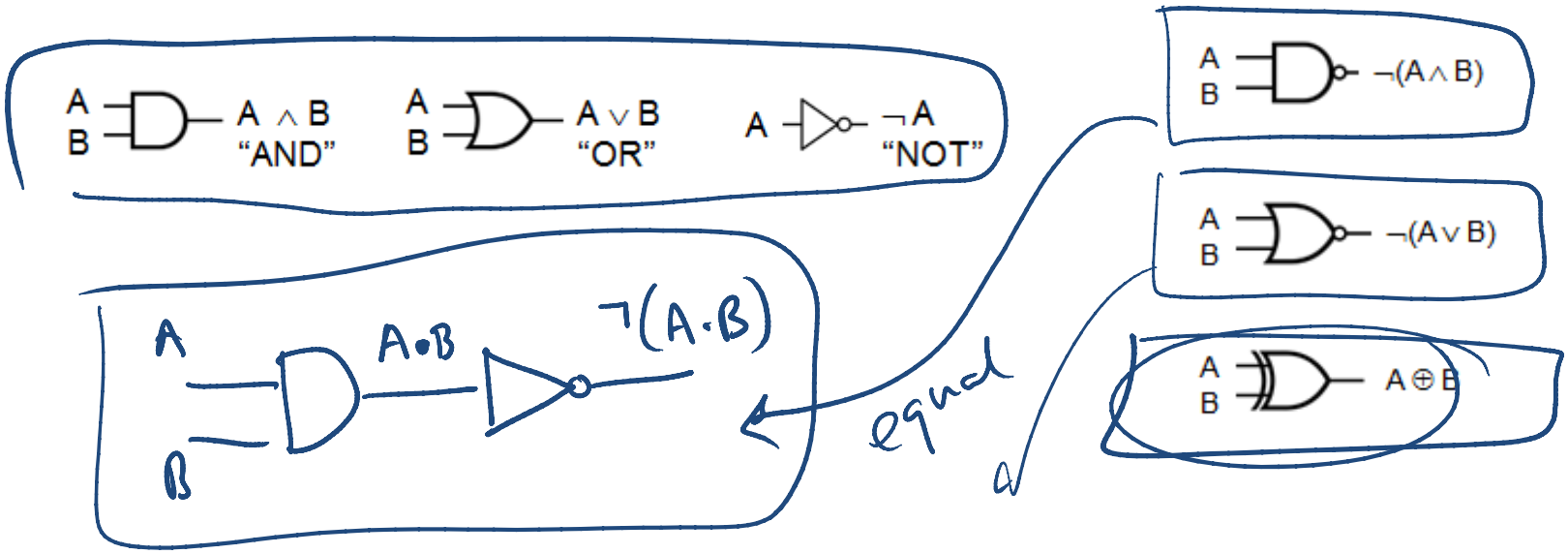

• → AND

+ — OR

Adding Binary Numbers

```
      1 1   1     100
A →   0 1 1 0     1101

B →   1 1 1 0     1110
      ---------------------
      1 0 1 0 1   1 0 1 1
```

overflow

base-2

carry

```
  1
  ---
2 | 3
    2
    ---
    1
```

sum

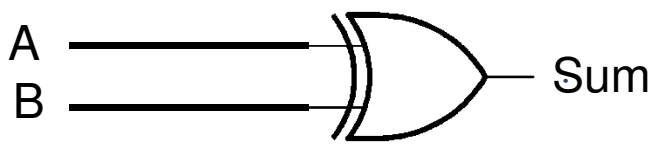

$2^{31}-1$

Adding Binary Numbers

Sum = $A \oplus B$

XOR	0	1
0	0	1
1	1	0

1 AND 1 = 1

1
1

1 1 0 0 A
1 0 1 0 B

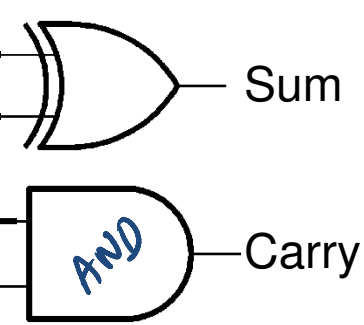

Half Adder

A Full Adder

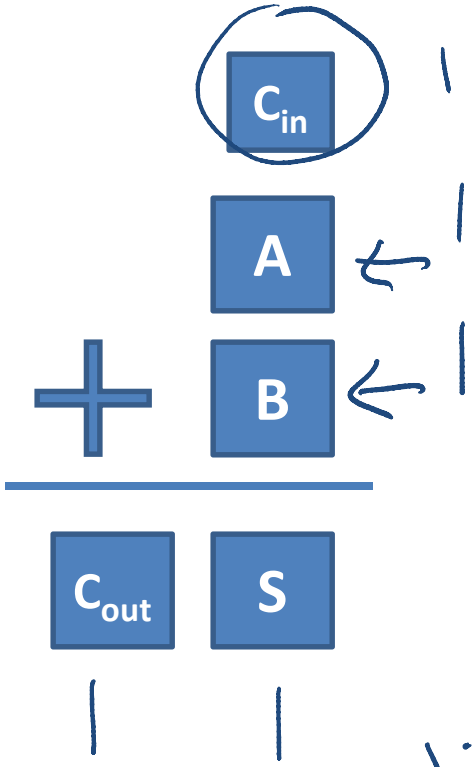

A	B	C_{in}	C_{out}	S
0	0	0	0	0
0	0	0	0	0
0	1	0	0	1
0	1	0	0	1
1	0	0	0	1
1	0	0	0	1
1	1	0	1	0
1	1	1	1	1

lo

hi

overflow

1111 0000

1100 1100

A Full Adder

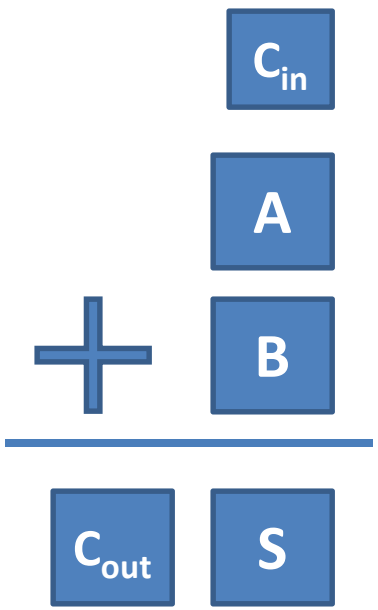

A	B	C_{in}	C_{out}	S
0	0	0	0	0
0	0	1	0	1
0	1	0	0	1
0	1	1	1	0
1	0	0	0	1
1	0	1	1	0
1	1	0	1	0
1	1	1	1	1

$$S = A \oplus B \oplus C_{in}$$

$$C_{out} = ((A \oplus B) \wedge C_{in}) \vee (A \wedge B)$$

Full Adder (FA)

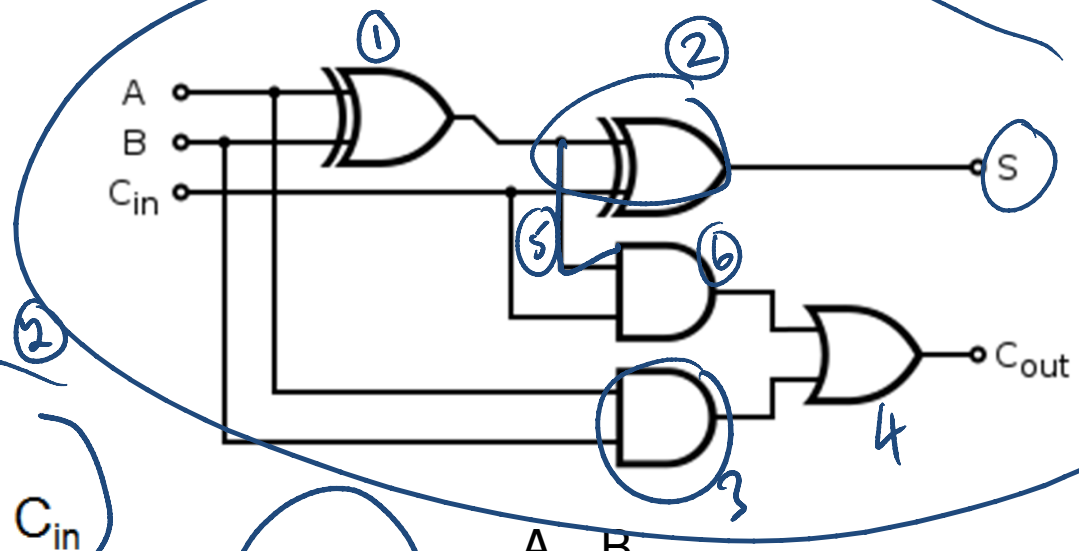

$$S = A \oplus B \oplus C_{in}$$

$$C_{out} = ((A \oplus B) \wedge C) \vee (A \wedge B)$$

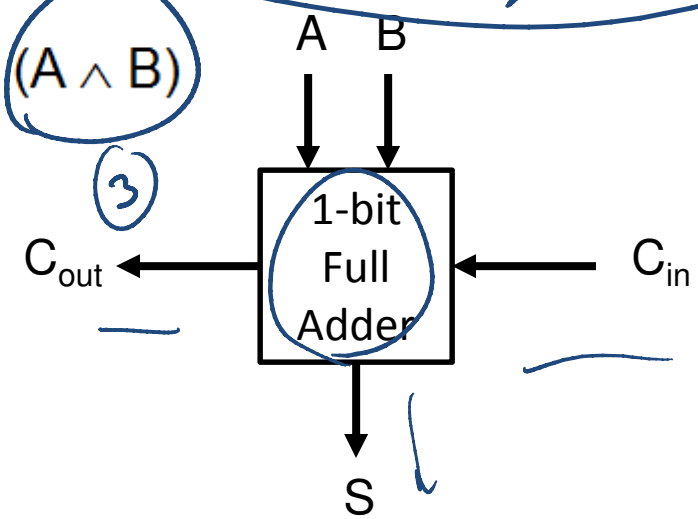

Another Full Adder (FA)

http://students.cs.tamu.edu/wanglei/csce350/handout/lab6.html

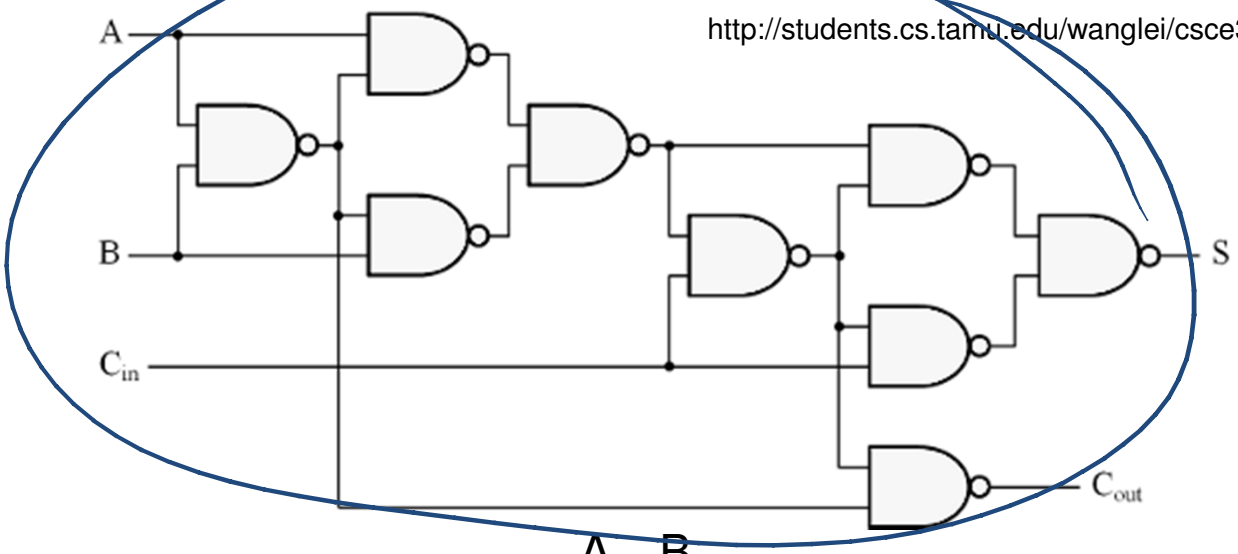

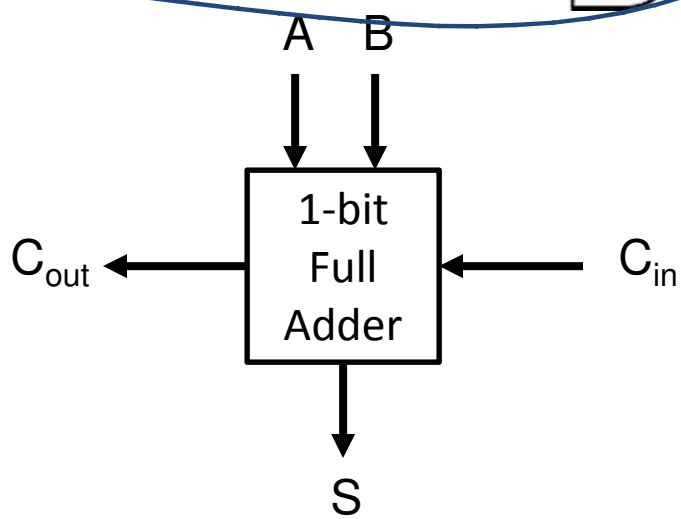

8-bit Full Adder

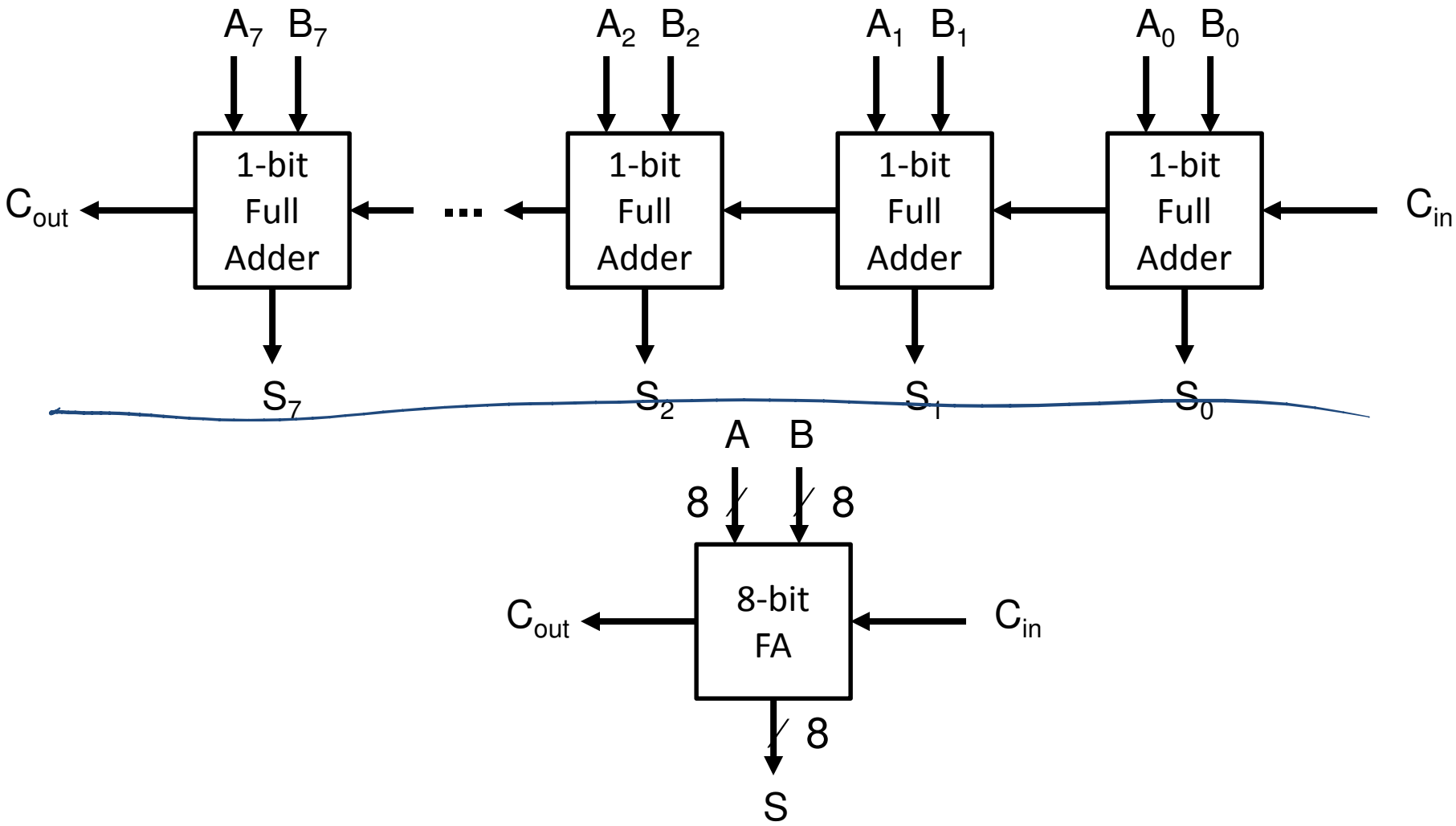

Exercise

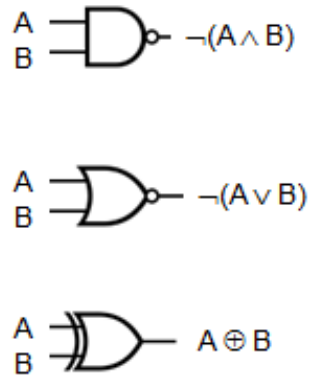

- Convert expressions to circuit

Exercise

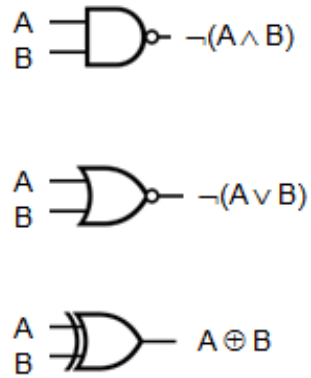

- Convert circuit to expressions

exercise

- Designing a control system

A	B	C	E
1	1	0	1
0	0	1	0
1	0	0	1
1	1	1	1

8 states

$\rightarrow A\bar{B}\bar{C}$

$\rightarrow ABC$

$$E = A \cdot B \cdot \bar{C} + A\bar{B}\bar{C} + ABC$$

$$A(B\bar{C} + \bar{B}\bar{C}) + ABC$$

$$A((B + \bar{B})\bar{C}) + ABC$$

$$A(1 \cdot \bar{C}) + ABC$$

$$A\bar{C} + ABC$$

$$A(\bar{C} + BC)$$

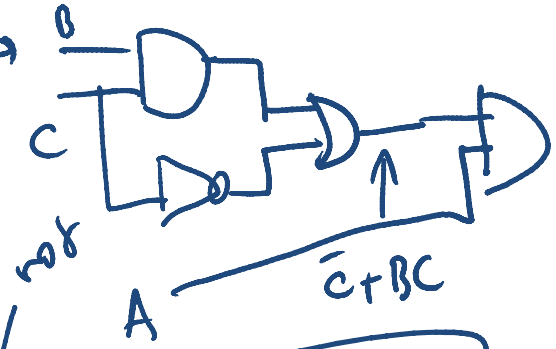

From Design to circuits

A	B	C	Output
0	0	0	0
0	0	1	0
0	1	0	0
0	1	1	1
1	0	0	0
1	0	1	1
1	1	0	1
1	1	1	1