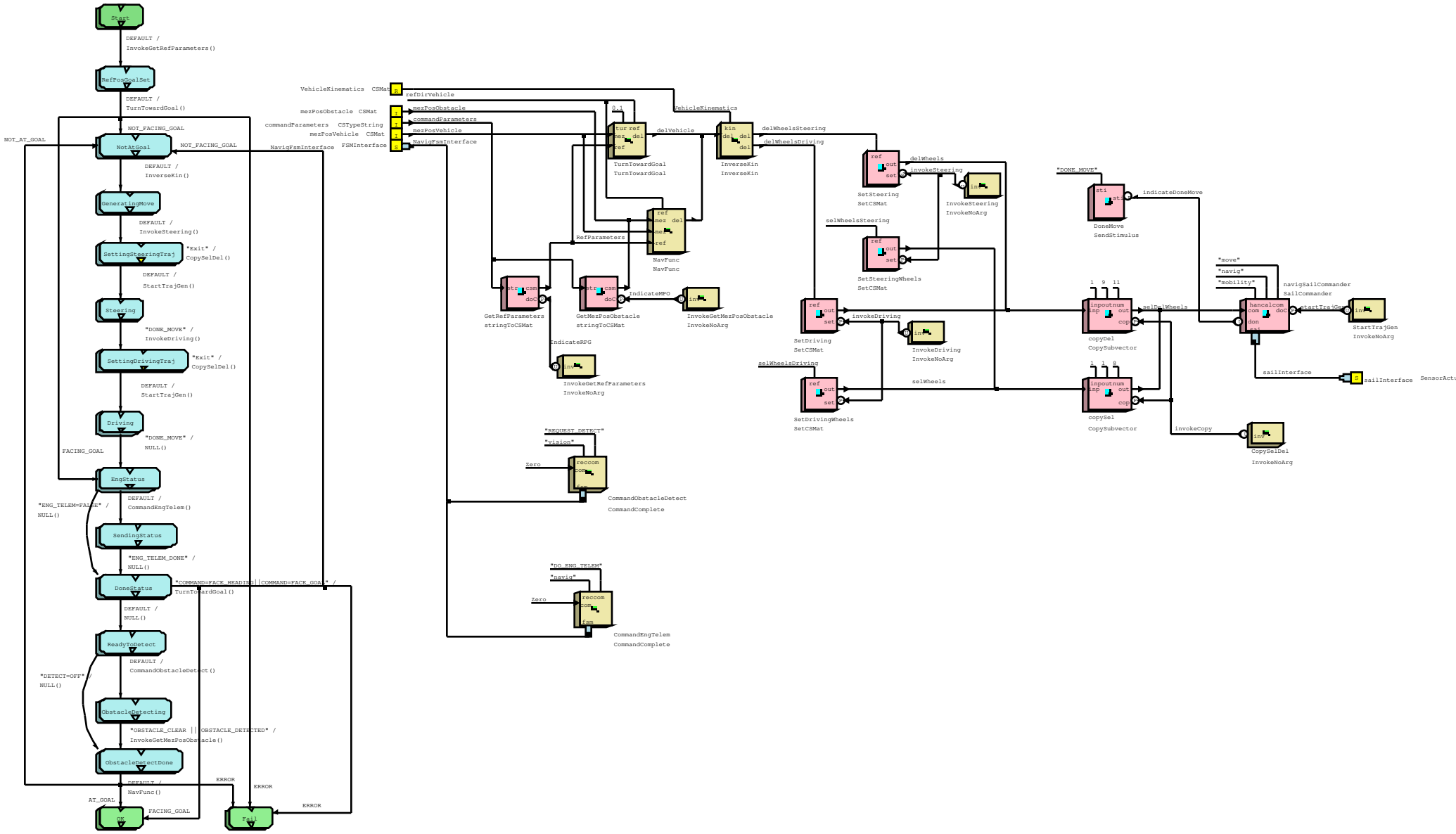Component via created on: Fri Sep 4 11:20:9, 1998