15-410

"Computers make very fast, very accurate mistakes."
--Brandon Long

Hardware Overview
Jan. 22, 2024

Dave Eckhardt

Synchronization

Don't forget to read the syllabus!

Don't forget to read the syllabus!

Don't forget to read the syllabus!

Synchronization

Today's class

- Not exactly OSC Chapter 2 or 13
- Not exactly OS:P+P Chapter 2, Section 3.0/3.5

Upcoming

- Project 1
- Lecture on “The Process”

Learning Goals

Aim to know these after this lecture

- Register kinds
- Trap vs. interrupt
- User mode vs. kernel mode
- Running vs. runnable vs. blocked
- Race condition
- Interval timer

Outline

Computer hardware

CPU State

Fairy tales about system calls

CPU context switch (intro)

Interrupt handlers

Race conditions

Interrupt masking

Sample hardware device – countdown timer

Inside The Box - Historical/Logical

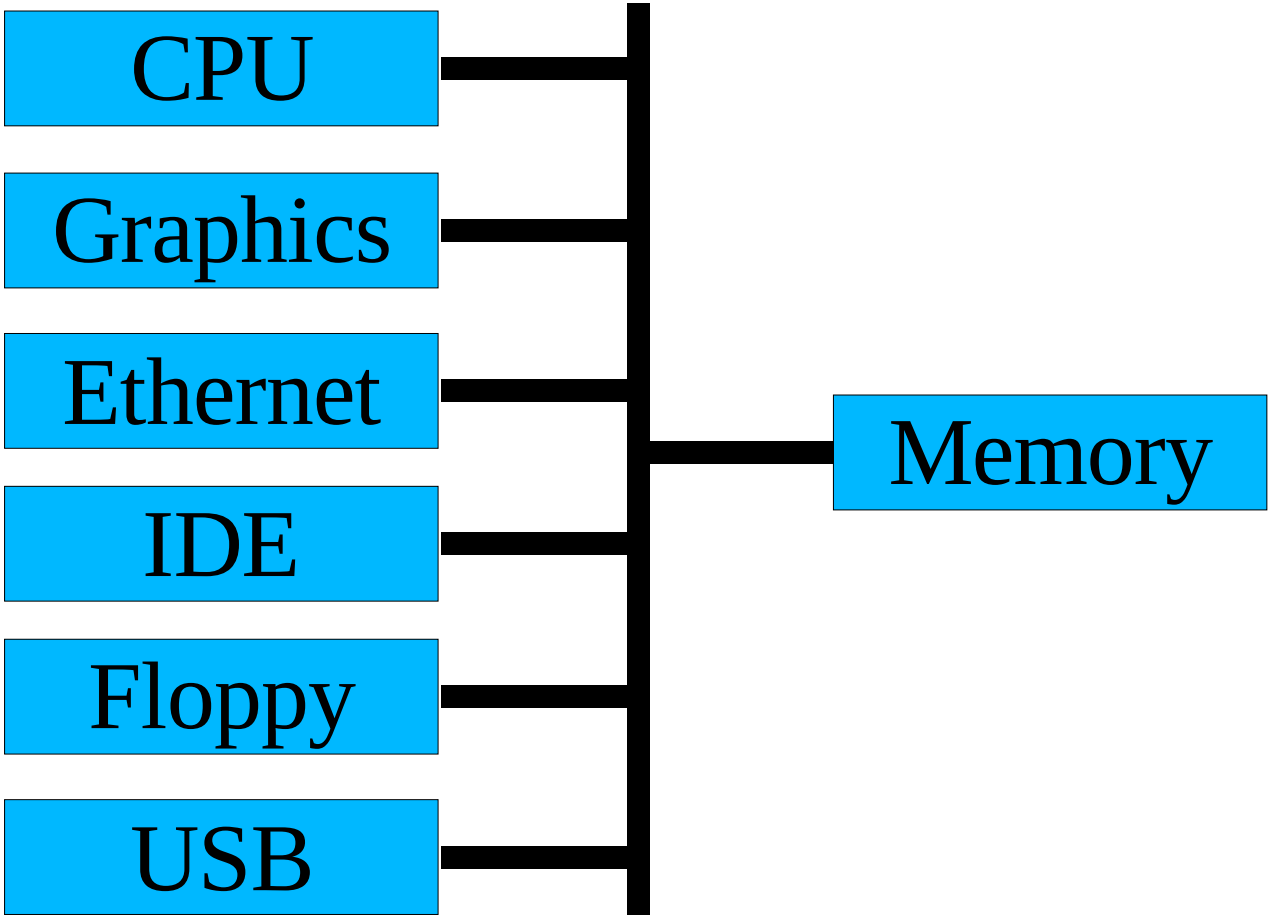

Inside The Box - 1997-2004

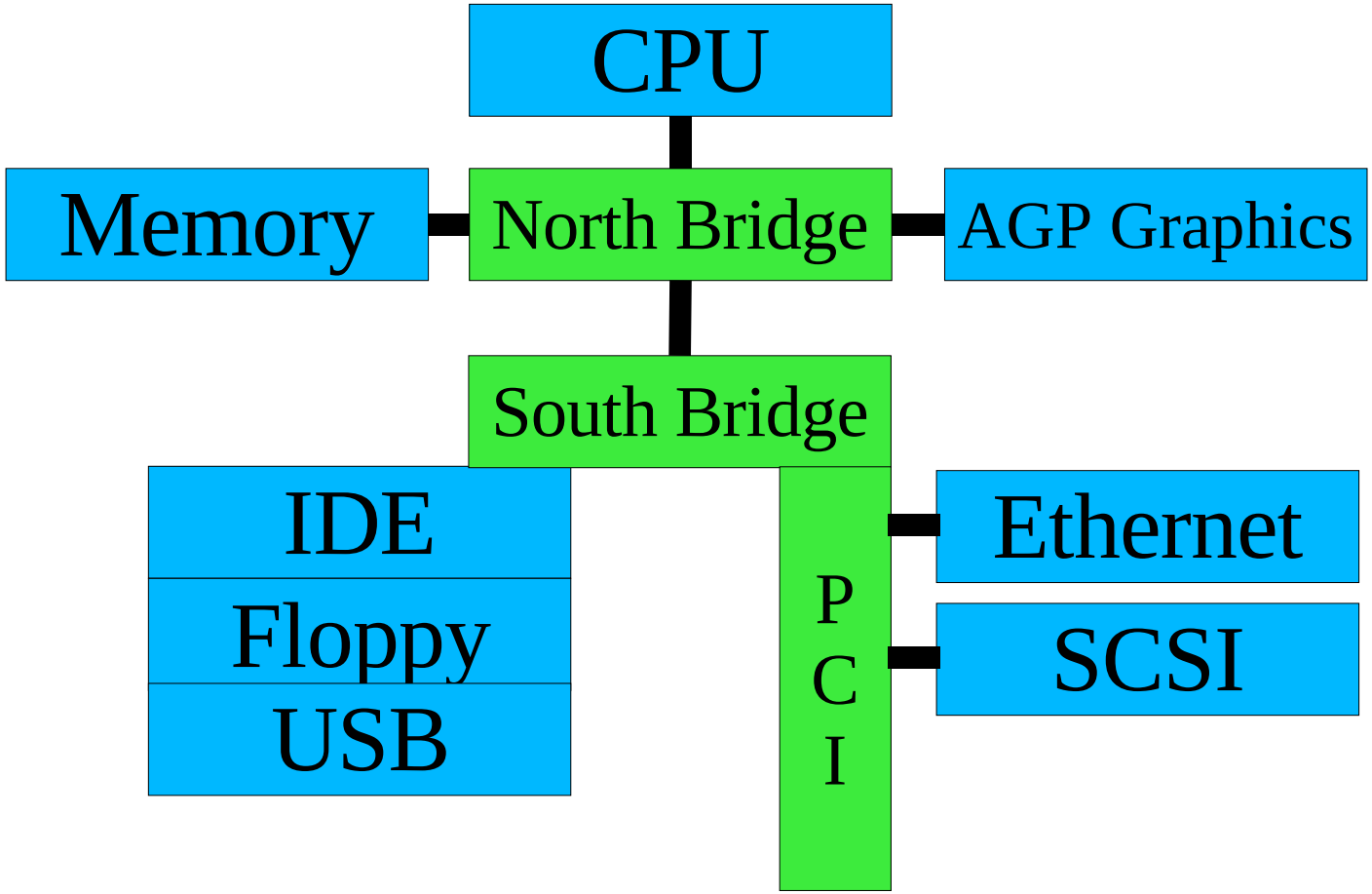

Inside The Box - 2004-2008

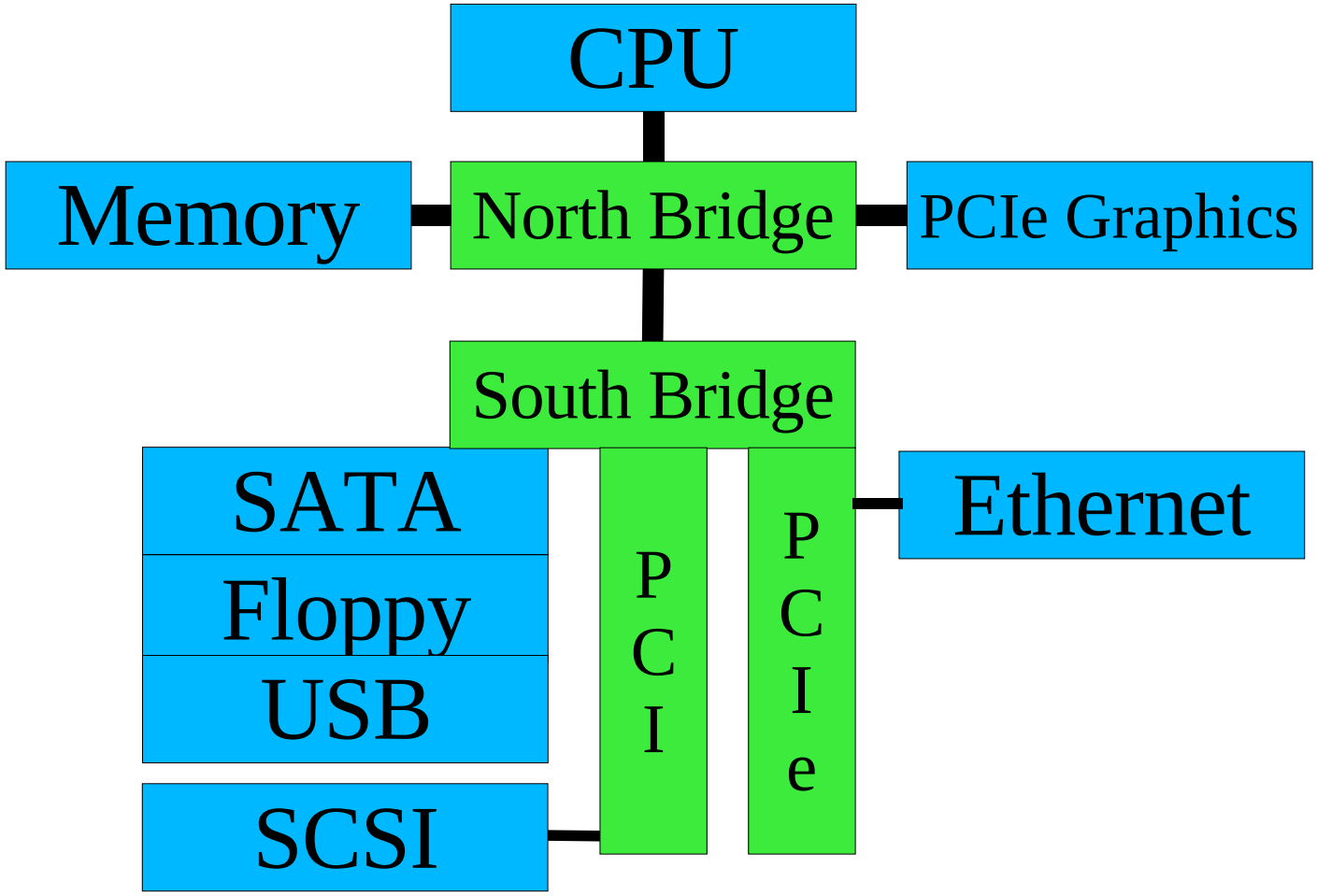

CPU State

User registers (on Planet IA32)

- General purpose - %eax, %ebx, %ecx, %edx
- Stack Pointer - %esp
- Frame Pointer - %ebp
- Mysterious String Registers - %esi, %edi

CPU State

Non-user **registers, a.k.a....**

Processor status register(s)

- **Currently running: user code / kernel code?**
- **Interrupts on / off**
- **Virtual memory on / off**
- **Memory model**
  - **small, medium, large, purple dinosaur**

CPU State

Floating point number registers

- Logically part of “User registers”
- Sometimes another “special” set of registers
  - Some machines don't have floating point
  - Some processes don't use floating point

Story time!

Time for some fairy tales

- The getpid() story (shortest legal fairy tale)
- The read() story (toddler version)
- The read() story (grade-school version)

The Story of getpid()

User process is computing

- User process calls getpid() library routine
- Library routine executes `TRAP $314159`
  - In Intel-land, `TRAP` is called "`INT`" (because it isn't one)
    - » REMEMBER: "`INT`" is *not an interrupt*

The world changes

- Some registers dumped into memory somewhere
- Some registers loaded from memory somewhere

The processor has *entered kernel mode*

User Mode

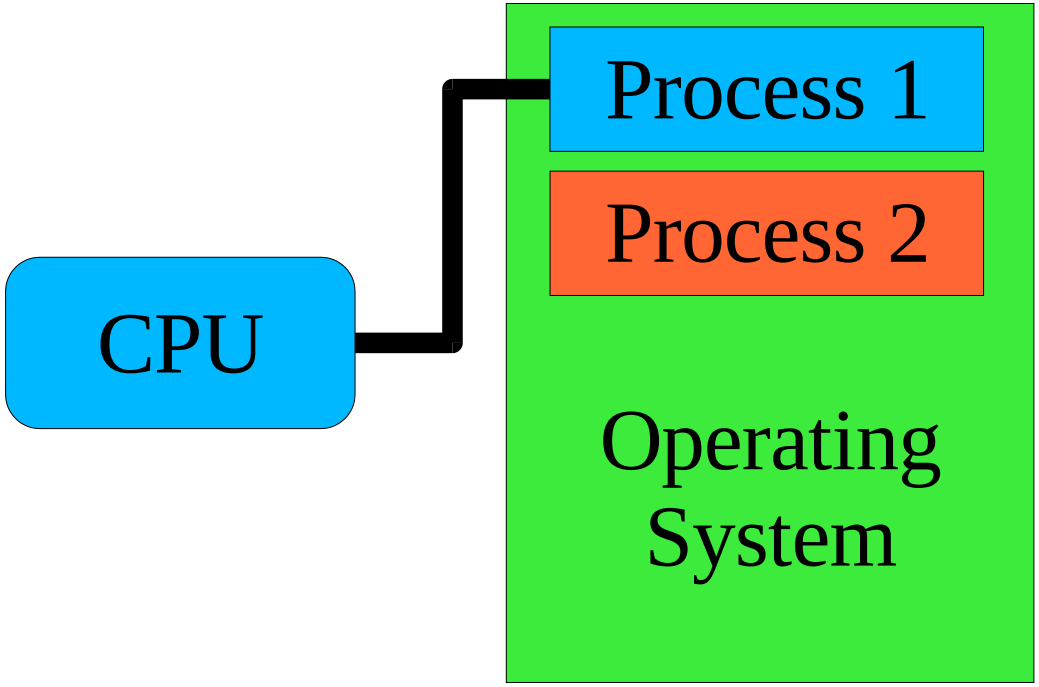

Entering Kernel Mode

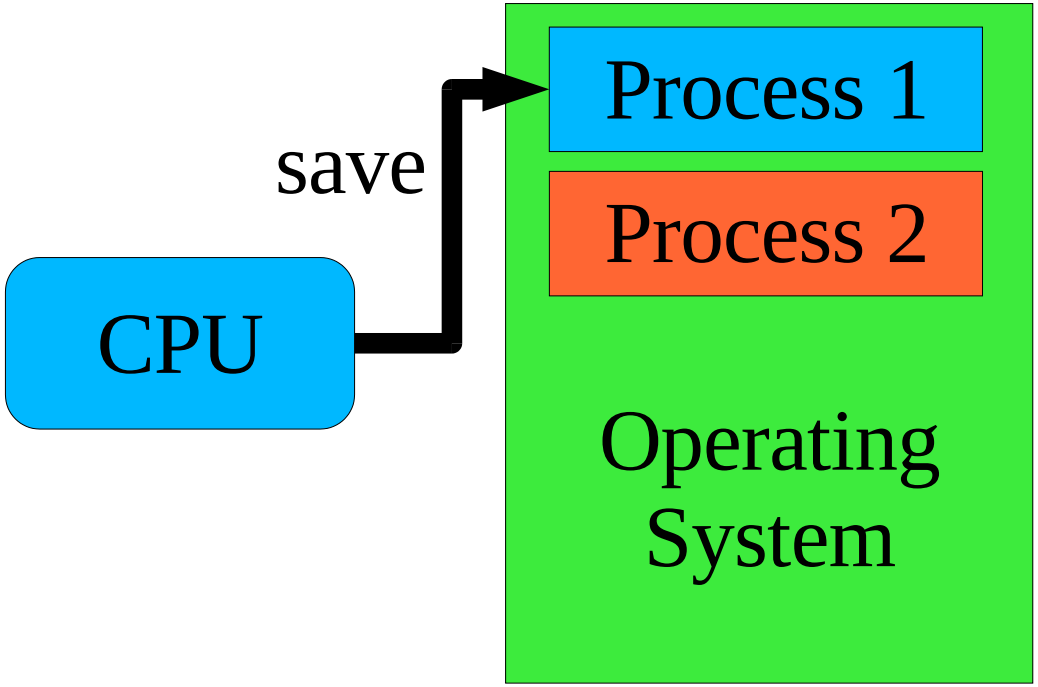

Entering Kernel Mode

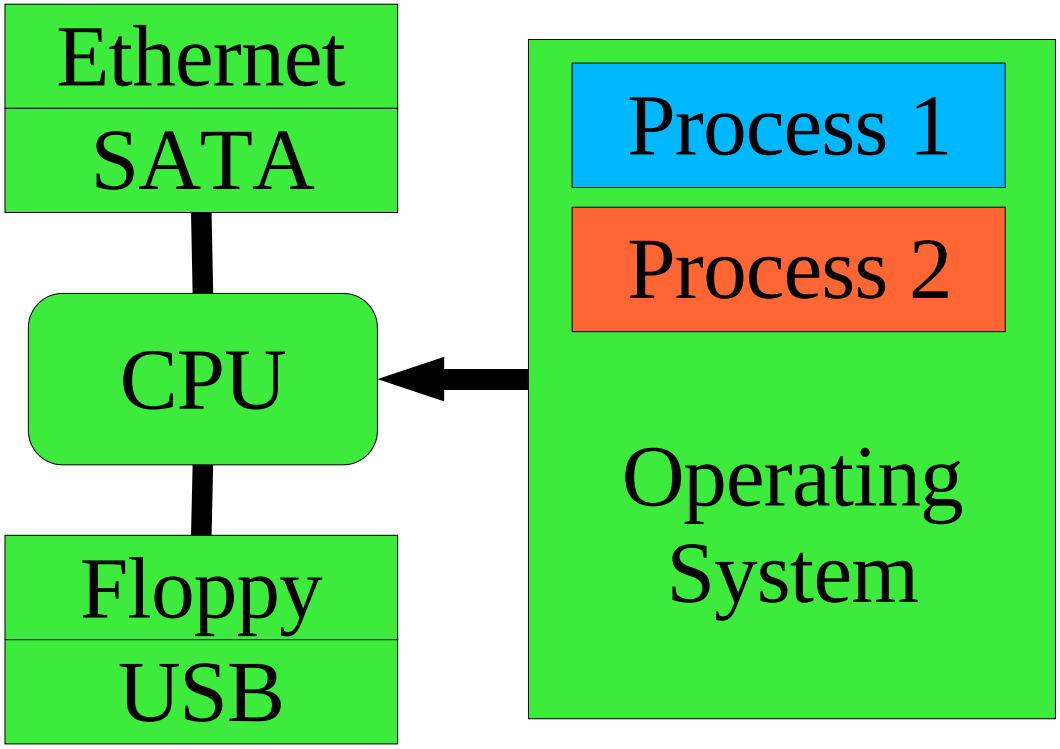

The Kernel Runtime Environment

Language runtimes differ

- ML: may have no stack ("nothing but heap")
- C: stack-based

Processor is more-or-less agnostic

- Some assume/mandate a stack

"Trap handler" builds kernel runtime environment

- Depending on processor
  - Switches to correct stack
  - Saves registers
  - Turns on virtual memory
  - Flushes caches

The Story of getpid()

Process runs in kernel mode

- `running->u_reg[R_EAX] = running->u_pid;`

"Return from trap"

- Processor state restored to user mode
  - (modulo %eax)

User process returns to computing

- Library routine returns %eax as value of getpid()

Returning to User Mode

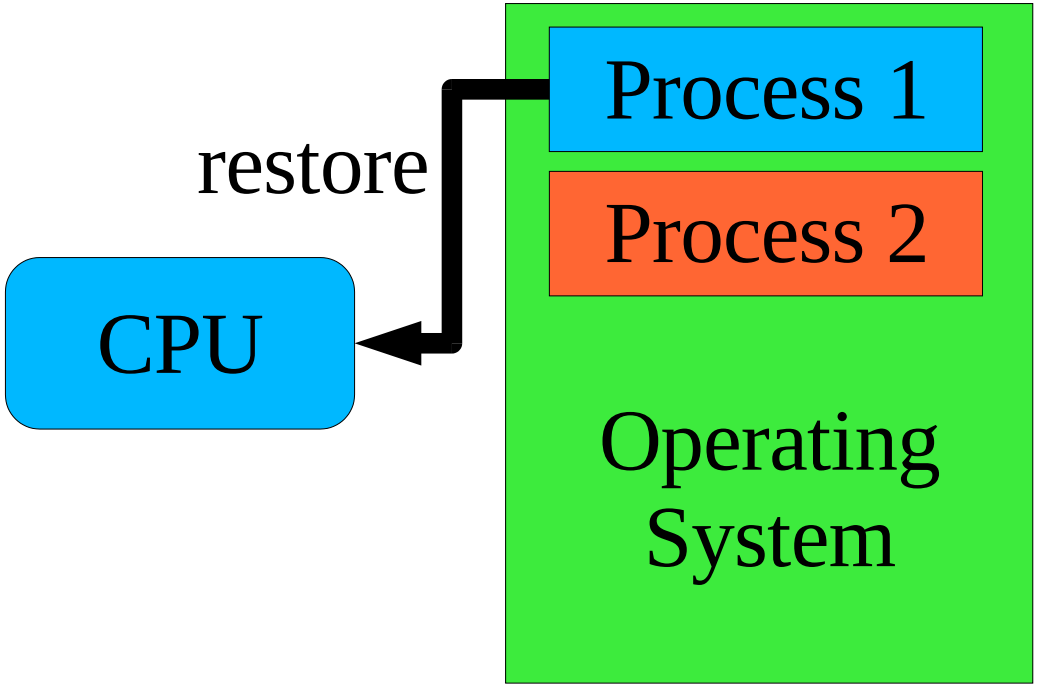

The Story of getpid()

What's the getpid() system call?

- C function you call to get your process ID
- "Single instruction" (`INT`) which modifies %eax
- Privileged code which can access OS internal state

A Story About read()

User process is computing

```
count = read(7, buf, sizeof (buf));
```

User process "stops running"

Operating system issues disk read

Time passes

Operating system copies data to user buffer

User process "starts running again"

Another Story About read()

P1: read()

- Trap to kernel mode

Kernel: tell disk: "read sector 2781828"

Kernel: switch to running P2

- Return to user mode - but to P2, not P1!
- P1 is "blocked in a system call"
  - P1's %eip is somewhere in the kernel
    - » (details later)
  - Marked "unable to execute more instructions"

P2: compute 1/3 of Mandelbrot set

Another Story About read()

Disk: done!

- Asserts “interrupt request” signal
- CPU stops running P2's instructions
- Interrupts to kernel mode
- Runs “disk interrupt handler” code

Kernel: switch to P1

- Return from interrupt - but to P1, not P2!
- P2 is able to execute instructions, but not doing so
  - P2 is not running
  - But it is not “blocked”
  - It is “runnable”

Interrupt Vector Table

How should CPU handle *this particular* interrupt?

- Disk interrupt ⇒ invoke disk driver
- Mouse interrupt ⇒ invoke mouse driver

Need to know

- Where to dump registers
  - Often: property of current process, not of interrupt
- New register values to load into CPU
  - Key: new program counter, new status register
    - » These define the new execution environment

Interrupt Dispatch

Table lookup

- Interrupt controller says: this is interrupt source #3
- CPU fetches table entry #3
  - Table base-pointer programmed in OS startup
  - Table-entry size defined by hardware

Save old processor state

Modify CPU state according to table entry

Start running interrupt handler

Interrupt Return

"Return from interrupt" operation

- Load saved processor state back into registers
- Restoring program counter reactivates "old" code
- Hardware instruction typically restores some state
- Kernel code must restore the remainder

Example: x86/IA32

CPU saves old processor state

- Stored on "kernel stack" (picture follows)

CPU modifies state according to table entry

- Loads new privilege information, program counter

Interrupt handler begins

- Uses kernel stack for its own purposes

Interrupt handler completes

- Empties stack back to original state
- Invokes "interrupt return" (`IRET`) instruction
  - Registers loaded from kernel stack
  - Mode may switch from "kernel" to "user"
    - » Also may "non-switch" from kernel to kernel

IA32 Single-Task Mode Example

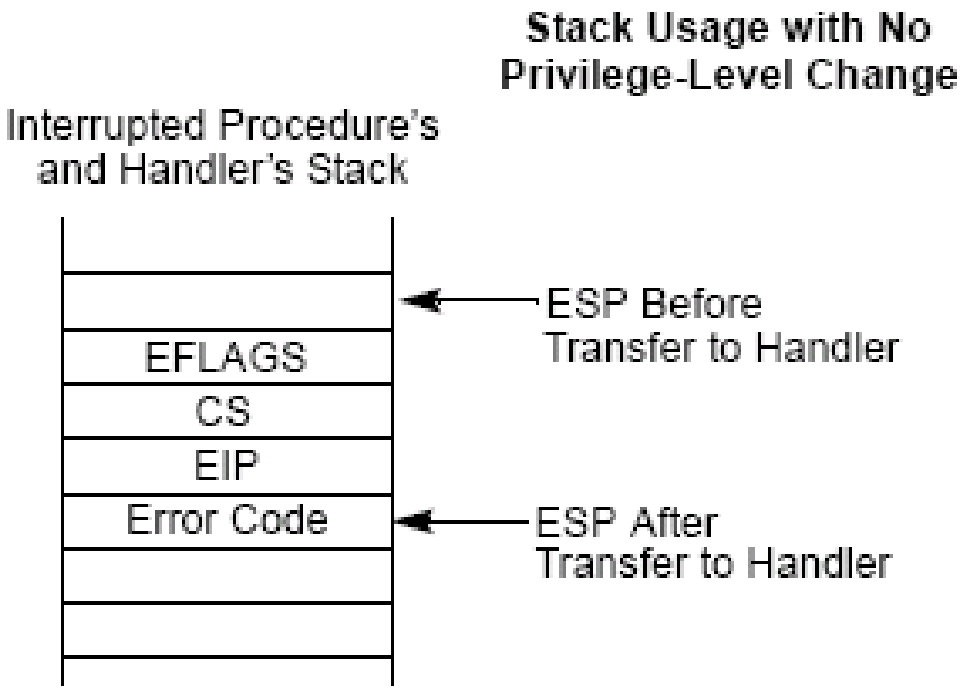

From intel-sys.pdf (please consult!)

Picture: Interrupt/Exception <u>while in kernel mode</u> (Project 1)

Hardware pushes registers on current stack, NO STACK CHANGE

- **EFLAGS (processor state)**
- **CS/EIP (return address)**
- **Error code (*certain* faults, *not others*: see intel-sys.pdf)**
- **IRET restores state from EIP, CS, EFLAGS**

Race Conditions

1. **Two concurrent activities**
   - Computer program, disk drive
2. **Various execution sequences produce various "answers"**
   - Disk interrupt *before* or *after* function call?
3. **Execution sequence is not controlled**
   - So either outcome is possible "randomly"

⇒ **System produces random "answers"**
   - One answer or another "wins the race"

Race Conditions – Disk Device Driver

"Top half" wants to launch disk-I/O requests

- If disk is idle, send it the request
- If disk is busy, queue request for later

Interrupt handler action depends on queue status

- Work in queue ⇒ transmit next request to disk
- Queue empty ⇒ let disk go idle

Race Conditions – Disk Device Driver

"Top half" wants to launch disk-I/O requests

- If disk is idle, send it the request
- If disk is busy, queue request for later

Interrupt handler action depends on queue status

- Work in queue ⇒ transmit next request to disk
- Queue empty ⇒ let disk go idle

Various execution orders possible

- Disk interrupt *before* or *after* "disk is idle" test?

System produces random "answers"

- "Work in queue ⇒ transmit next request" (good)
- "Work in queue ⇒ let disk go idle" (what??)

Race Conditions – Driver Skeleton

```
dev_start(request) {
  if (device_idle) {
    device_idle = 0;
    send_device(request);
  } else {
    enqueue(request);
  }
}
dev_intr() {
  ...finish up previous request...
  if (new_request = head()) {
    send_device(new_request);
  } else
    device_idle = 1;
}
```

Race Conditions – Good Case

User process	*Interrupt handler*
`if (device_idle)`	
`/* no, so... */`	
`enqueue(request)`	
	`INTERRUPT`
	`...finish up...`
	`new = 0x80102044;`
	`send_device(new);`
	`RETURN FROM INTERRUPT`

Race Conditions – Bad Case

User process	*Interrupt handler*
`if (device_idle)`	
`/* no, so... */`	
	`INTERRUPT`
	`..finish up...`
	`new = 0;`
	`device_idle = 1;`
	`RETURN FROM INTERRUPT`
`enqueue(request)`	

What Went Wrong?

"Top half" ran its algorithm

- Examine state
- Commit to action

Interrupt handler ran *its* algorithm

- Examine state
- Commit to action

Various outcomes possible

- Depends on exactly when interrupt handler runs

System produces random "answers"

- Study & avoid this in your P1!

What To Do?

Two approaches

- Temporarily suspend/mask/defer device interrupt while checking and enqueueing
  - Will cover further before Project 1
- Or use a lock-free data structure
  - [left as an exercise for the reader]

Considerations

- Avoid blocking *all* interrupts
  - [not a big issue for 15-410]
- Avoid blocking too long
  - Part of Project 1, Project 3 grading criteria

Timer – Behavior

Simple behavior

- Count something
  - CPU cycles, bus cycles, microseconds
- When you hit a limit, signal an interrupt
- Reload counter to initial value
  - Done “in background” / “in hardware”
  - (Doesn't wait for software to do reload)

Summary

- No “requests”, no “results”
- Steady stream of evenly-distributed interrupts

Timer – Why?

Why interrupt a perfectly good execution?

Avoid CPU hogs

```
while (1)
  continue;
```

Maintain accurate time of day

- Battery-backed calendar counts only seconds (poorly)

Dual-purpose interrupt

- Timekeeping

```
++ticks_since_boot;
```

- Avoid CPU hogs: force process switch

Summary

Computer hardware

CPU State

Fairy tales about system calls

CPU context switch (intro)

Interrupt handlers

Race conditions

Interrupt masking

Sample hardware device – countdown timer