15-410

"...RADIX-50??..."

File System (Interface)
October 31, 2016

Dave Eckhardt

Dave O'Hallaron

Rahul Iyer

Synchronization

Today

- Chapter 11, File-System Interface
  - Ok to skip: remote/distributed (11.5.2!!)

Also read Chapter 13

- Might help demystify readline() some

Synchronization

Scoreboard

- Congratulations to groups who are on the board...
  - Some groups are clearly ahead of the game!
- That URL again
  - http://www.cs.cmu.edu/~410/scoreboard.html

Synchronization

Project 3 tactical considerations

- Getting the shell running is important
  - We won't build a hand-load kernel for each test!
  - Test harness relies on shell to launch programs
- Getting a body of code *solid* is important
  - Better for `exec()` to work 1,000 times than `thr_fork` once
- Run tests as soon as you can
  - Scoreboard can be a source of inspiration!
- Carefully consider the P3extra overtime
  - In general, getting a really solid kernel is the best thing
    - » For your grade
    - » For your education!

What's a file?

Abstraction of *persistent storage*

- **Hide details of storage devices**
  - **sector addressing: CHS vs. LBA**
  - **SCSI vs. IDE**
- **Hide details of allocation/location on a storage device**

***Logical* grouping of data**

- **May be *physically* scattered**

Programs, data

Some internal structure

Typical file attributes

Name – 14 characters? 8.3? 255?

- Unicode? ASCII? 6-bit? RADIX-50?

Identifier – “file number” (usually internal)

Type (or not) – hint for launching app, or not

Location – device, block list

Size – two meanings (next lecture)

Protection – Who can do what?

Time, date, last modifier – monitoring, cleaning up

“Extended” file attributes

BSD Unix

- archived
- nodump
- append-only (by user/by operating system)
- immutable (by user/by operating system)

MacOS

- program that created the file

Plan 9

- Identity of most recent mutator

Operations on Files

Create – locate space (maybe), enter into directory

Write, Read – often via position pointer/"cursor"

Seek – adjust position pointer for next access

Delete – remove from directory, release space (maybe)

Truncate

- Trim some data from end of file (common case: all data)

Append – write at end of file (implicit synchronization)

Rename

- Change name of file inside a directory
- Move a file between two directories (maybe)

I/O to a File – Take 1

Users will read/write files

- Not being able to defies the point in having them

So, how do you read from and write to one?

- read(“README.dox”, input_buffer, num_bytes);
  - What's the problem with this?

I/O to a File – Take 1

Users will read/write files

- Not being able to defies the point in having them

So, how do you read from and write to one?

- read(“README.dox”, input_buffer, num_bytes);
  - What's the problem with this?
- read(“README.dox”, input_buffer, num_bytes, start_loc);
  - What's the problem with this?

What's the solution?

I/O to a File – Take 2: Open-file State

Expensive to specify name for each read()/write()

- String-based operation
- Directory look-up

Add an open() operation

- Adds "state"

"Open-file" structure stores:

- File-system / partition
- File-system-relative file number
- Operations allowed: eg., Read vs. write
- Cursor position

Something still missing?

Open files (Unix Model)

"In-core" file state – avoid going to disk repeatedly

- Mirror of on-disk structure
  - File number, size, permissions, modification time, ...
- Housekeeping info
  - Back pointer to enclosing file system
  - Pointer to disk device hosting the file
  - Who holds locks on ranges of file
- How to access file (vector of methods)
- Pointer to file's type-specific data

Shared when file is opened multiple times

Open files (Unix Model)

"Open file" **state – result of one open() call**

- **Results are retained for use by multiple I/O calls**
  - **Pointer to underlying "open file"**
  - **Credentials of process (when it opened the file)**
  - **Access mode (read vs. write, auto-append, ...)**
  - **Cursor position**

Shared **by multiple processes**

  - **"copied" by fork()**
  - **inherited across exec()**

Example

```
int fd1, fd2, fd3;
off_t pos2, pos3;
char buf[10];

fd1 = open("foo.c", O_RDONLY, 0);
fd2 = dup(fd1);
fd3 = open("foo.c", O_RDONLY, 0);
read(fd1, &buf, sizeof (buf));

pos2 = lseek(fd2, 0L, SEEK_CUR); /* ⇒? */
pos3 = lseek(fd3, 0L, SEEK_CUR); /* ⇒? */
```

Example

```
int fd1, fd2, fd3;
off_t pos2, pos3;
char buf[10];

fd1 = open("foo.c", O_RDONLY, 0);
fd2 = dup(fd1);
fd3 = open("foo.c", O_RDONLY, 0);
read(fd1, &buf, sizeof (buf));

pos2 = lseek(fd2, 0L, SEEK_CUR); /* 10 */
pos3 = lseek(fd3, 0L, SEEK_CUR); /*  0 */
```

“Open File” vs. “In-Core File”

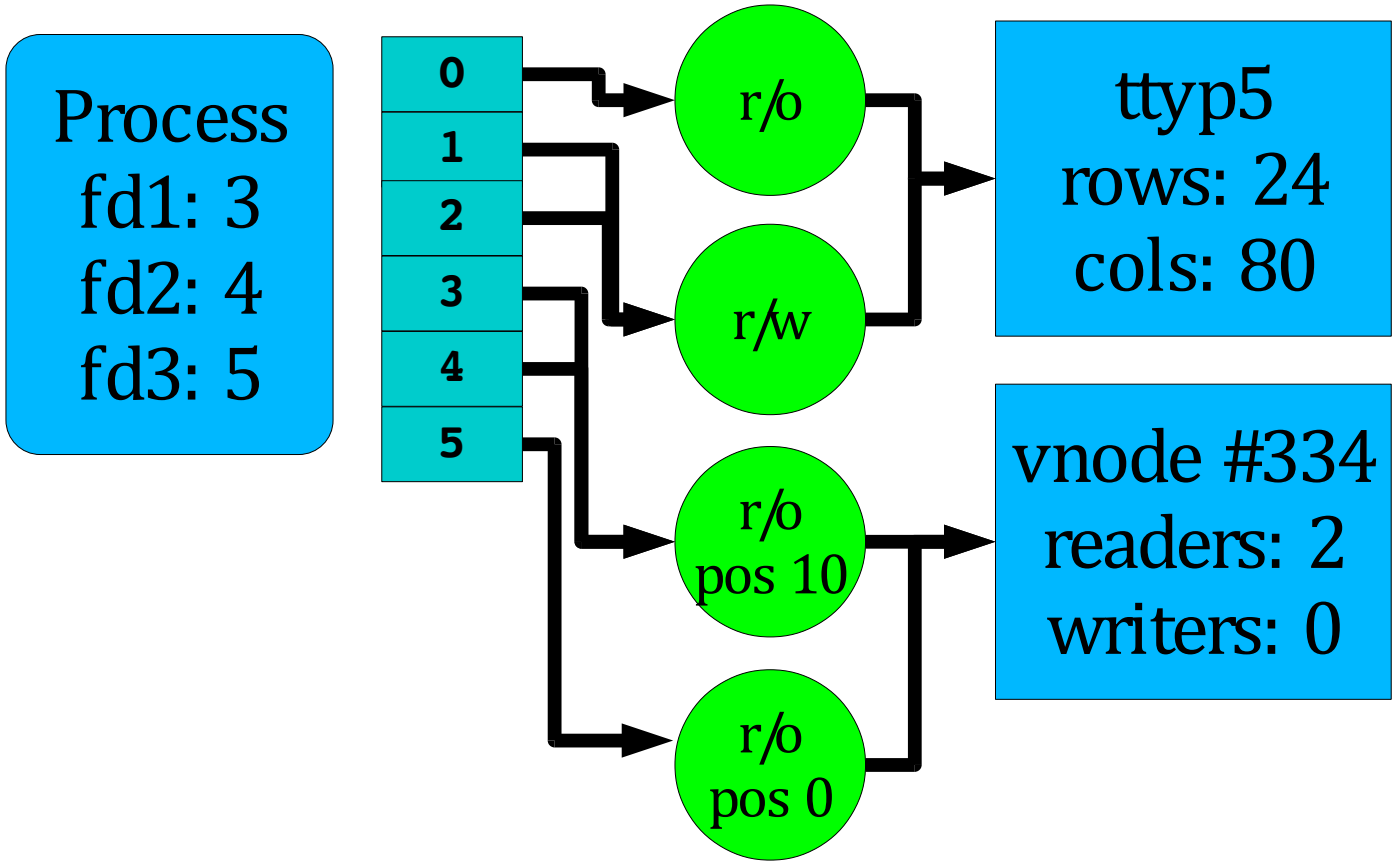

File types (or not)

Goal

- Avoid printing a binary executable file
- Find program which "understands" a file selected by user

Derive "type" from file names

- *.exe are executable, *.c are C

Tag file with type information (extended attributes)

- MacOS: 4-byte *type*, 4-byte *creator*

Unix: Both/neither

- Leave it (mostly) up to users (maybe: GUI, libraries, etc.)

File Structure

What's *in* a file?

- Stream of bytes?
  - What character set? US-ASCII? Latin-1? Unicode?
- Stream of records?
- *Array* of records? *Tree* of records?

Record structure?

- End of "line"
  - CR, LF, CR+LF
- Fixed-length? Varying? Bounded?

File Structure - Unix

Program loader *needs to know* about executables

- **"Magic numbers" in first two bytes**
  - **obsolete A.OUT types - OMAGIC, NMAGIC, ZMAGIC**
  - **MacOS: Mach-O**
  - **Linux: ELF**
  - **#! - script**

Otherwise, *array of bytes*

- **User/application remembers meaning (hopefully!)**

For a good time...

- **Try the "file" command**
- **Read /usr/share/misc/magic or /usr/share/file/magic**
  - **Marvel at the dedication of the masses:**
    - **>17,000 lines! 228 different file types.**

File Structure – MacOS "Classic"

Data fork

- Array of bytes
- Application-dependent structure

Resource fork

- Table of resources
  - Icon, Menu, Window, Dialog box
- Many resources are widely used & understood
  - Desktop program displays icons from resource fork

Effects still emulated in OS X

- Though implementation may differ

“Access Methods”

Provided by OS or optional program library

Sequential

- Like a tape
- read() next, write() next, rewind()
- Sometimes: skip forward/backward

Direct/relative

- Array of fixed-size records
- Read/write any record, by #

Access Methods – Indexed

File contains *records*

Records contain *keys*

Index **maps keys ⇒ records**

- **Sort data portion by key**
- **Binary search in multi-level list**

Fancy extensions

- **Multiple keys, multiple indices**
- **Are we having a database yet?**
  - **Missing: relations, triggers, consistency, transactions, ...**
- **Unix equivalent: dbm/ndbm/gdbm/bdb/...**

Directory Operations

Lookup("index.html")

Create("index.html")

Delete("index.html")

Rename("index.html", "index.html~");

Iterate over directory contents

Scan file system

- Unix "find" command
- Backup program

"Log changes to directory tree ____"

Directory Types

Single-level

- Flat global namespace – only *one* test.c
- Ok for floppy disks (maybe)

Two-level

- Every user has a directory
- One test.c *per user*
  - [1003,221]PROFILE.CMD vs. [1207,438]PROFILE.CMD
- Typical of early timesharing

Are we having fun yet?

Tree Directories

Absolute **Pathname**

- **Sequence of directory names**
- **Starting from "root"**
- **Ending with a file name**

Tree Directories

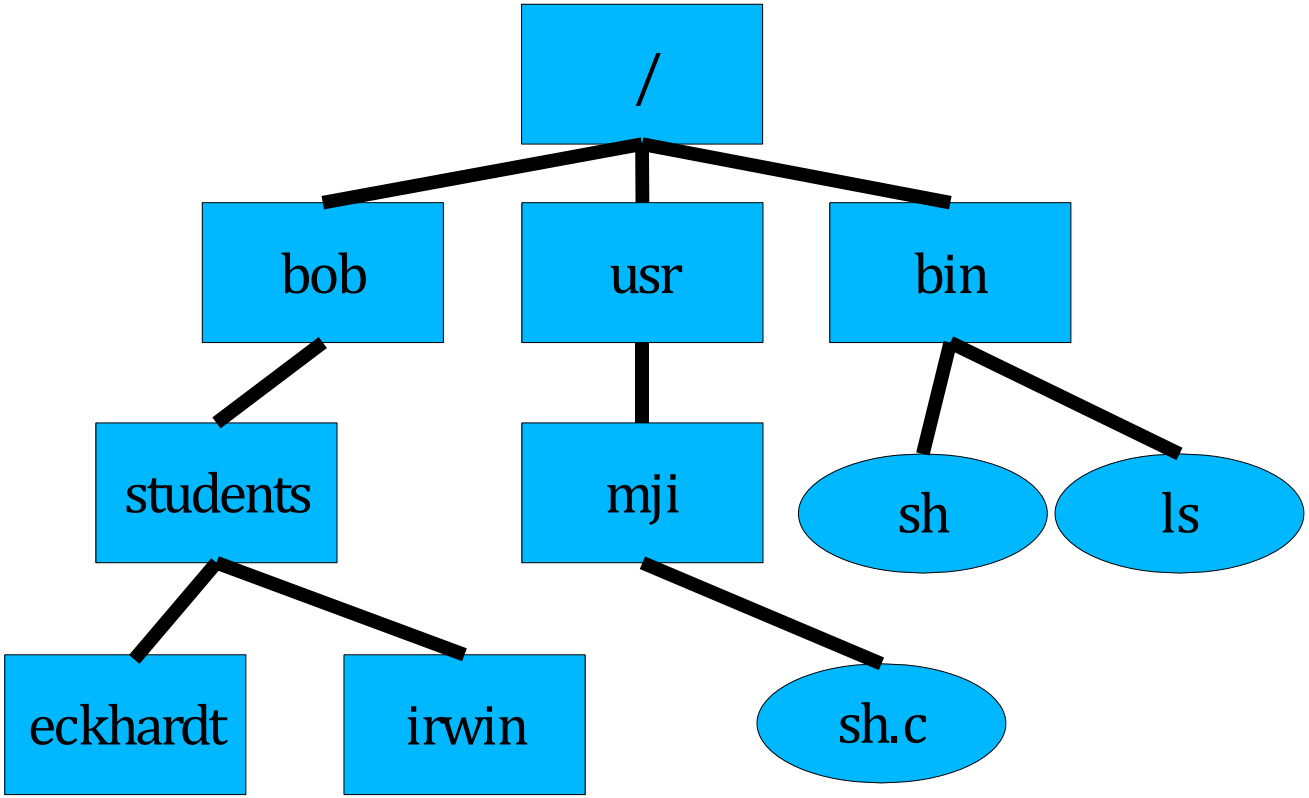

Tree Directories

Directories are special files

- Created with special system calls – mkdir()
- Format understood & maintained by OS

Current directory (“.”)

- “Where I am now” (e.g., /usr/zzz)
- Start of *relative* pathname
  - ./stuff/foo.c or stuff/foo.c ⇒ /usr/zzz/stuff/foo.c
  - ../joe/foo.c ⇒ /usr/joe/foo.c
- Directory reference in, e.g., `p->p_fd->fd_cdir`

DAG Directories

Share files and directories between users

Not mine, not yours: *ours*

Destroy when *everybody* **deletes**

Unix "hard link"

- **Remove an open file?**
  - **Stays "alive" until last close**
- **Files, not directories**
  - **(".. problem")**

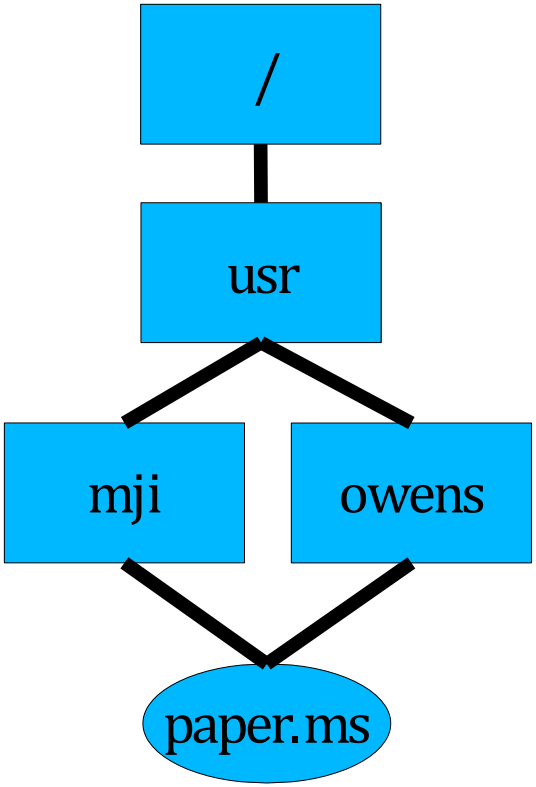

Soft links

Hard links "too hard"?

- Need a level of indirection in file system?
- Want "one true name" for a file?
- Need to cross to a different file system of a different type?

Alternative: soft link / symbolic link / "short cut"

- Tiny file, special type
- Contains *name* of another file
- OS dereferences link when you open() it
  - Link can point to a file *anywhere*
    - A file in a different type of file system
    - A remote file

Hard vs. Soft Links

Hard links

- Enable reference-counted sharing
- No name is “better” than another
- Reference counting no longer works, requires garbage collecting

Soft links

- Can soft-link a directory
  - one “true” parent, so no “.. problem”
- Work across file system & machine boundaries
- Easier to explain
- “Dangling link” problem
  - Owner of “one true file” can delete it
  - Soft link now points to nothing

Cyclic Graph Directories

Depth-first traversal can be slow!

May need *real* garbage collection

Do we really need this?

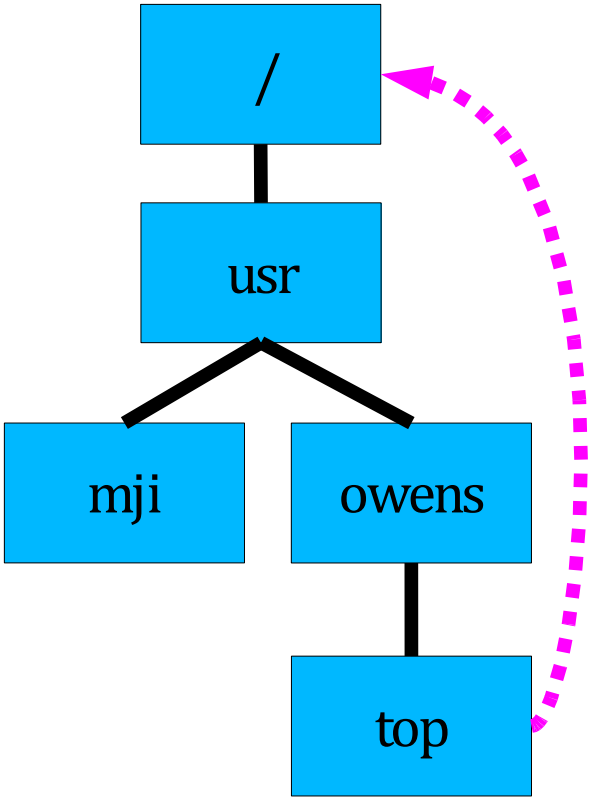

Mounting

Multiple disks on machine

Multiple partitions on disk

File system lives *within* a partition

How to name files in "another" file system?

- Wrong way
  - C:\temp vs. D:\temp
  - u:[usr,droh]PROFILE.CMD;1 vs. u:[usr,de0u]PROFILE.CMD;2

Mounting

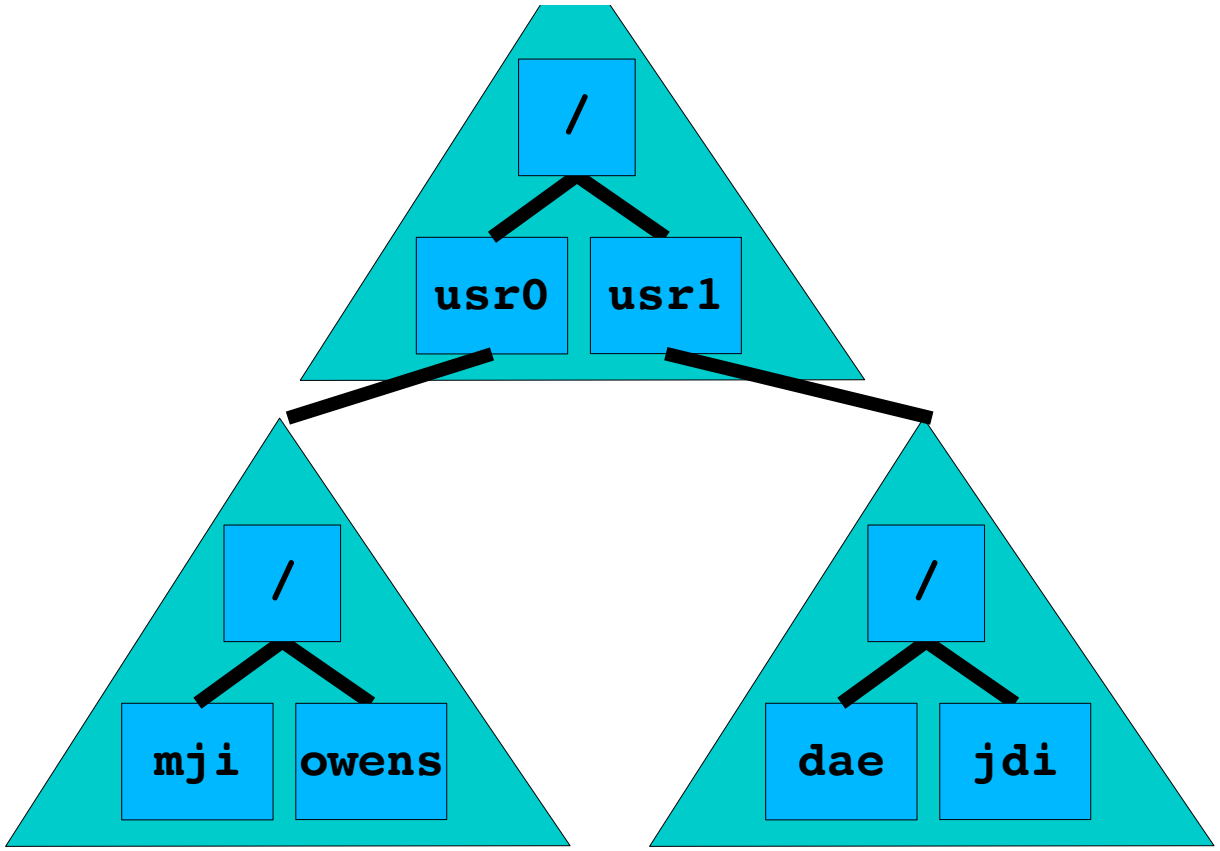

Multiple Users

Users want to share files

What's a user?

- Strings can be cumbersome
- Integers are nicer for OS to compare
- Unix: User ID / “uid”
- Windows: Security ID / “SID”

What's a group?

- A set of users
- Typically has its own gid / SID

Protection

Override “bit” (e.g., MS-DOG)

- Bit says “don't delete this file”
  - Unless I clear the bit

Per-file passwords

- Annoying in a hurry

Per-directory passwords

- Still annoying

Protection

Access modes

- Read, Write, Execute, Append, Delete, List, Lock, ...

Access Control List (ACL)

- File stores list of (user, modes) tuples
- Cumbersome to store, view, manage

Capability system

- User is given a list of (file, access keys) tuples
- Revocation problem

Protection – typical

File specifies *owner, group*

- Permissions for owner, permissions for group members
  - Read, write, ...
- Permissions for "other" / "world"
  - Read, write, ...

Unix

- r, w, x = 4, 2, 1
- r w x r – x - — x = 0751 (octal)
- V7 Unix: 3 16-bit words specified all permission info
  - permission bits, user #, group #
    - As of 2013-03-25, Andrew supports ~33,963 users... 16 bits is a little tight.

Summary

File

- Abstraction of disk/tape storage
  - Records, not sectors
  - Type information
- Naming
  - Complexity due to linking
- Ownership, permissions
- Semantics of multiple open()s

The ".. Problem"

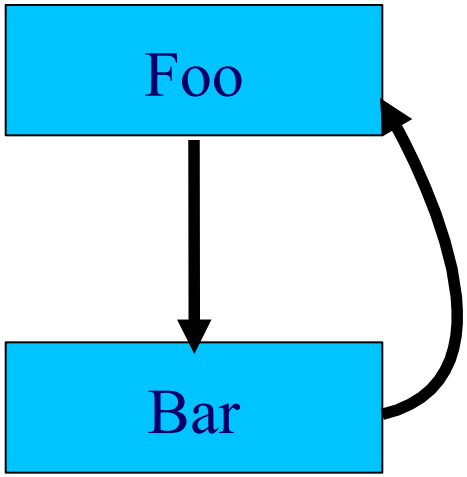


```
$ ln .. bar
```