15-462: Computer Graphics

Math for Computer Graphics

Topics for Today

- Vectors
- Equations for curves and surfaces
  - Implicit equations
  - Parametric equations
- Barycentric Coordinates

Implicit equations

- *Implicit equations* are a way to define curves and surfaces.
- In 2D, a curve can be defined by

$$f(x,y) = 0$$

for some scalar function f of x and y.

- In 3D, a surface can be defined by

$$f(x,y,z) = 0$$

for some scalar function f of x, y, and z.

Implicit equations

- The function *f* evaluates to 0 at every point on the curve or surface, and it evaluates to a non-zero real number at all other points.
- Multiplying *f* by a non-zero coefficient preserves this property, so we can rewrite

$$f(x,y) = 0$$

$$\text{as } kf(x,y) = 0$$

  for any non-zero *k*.
- The implied curve is unaffected.

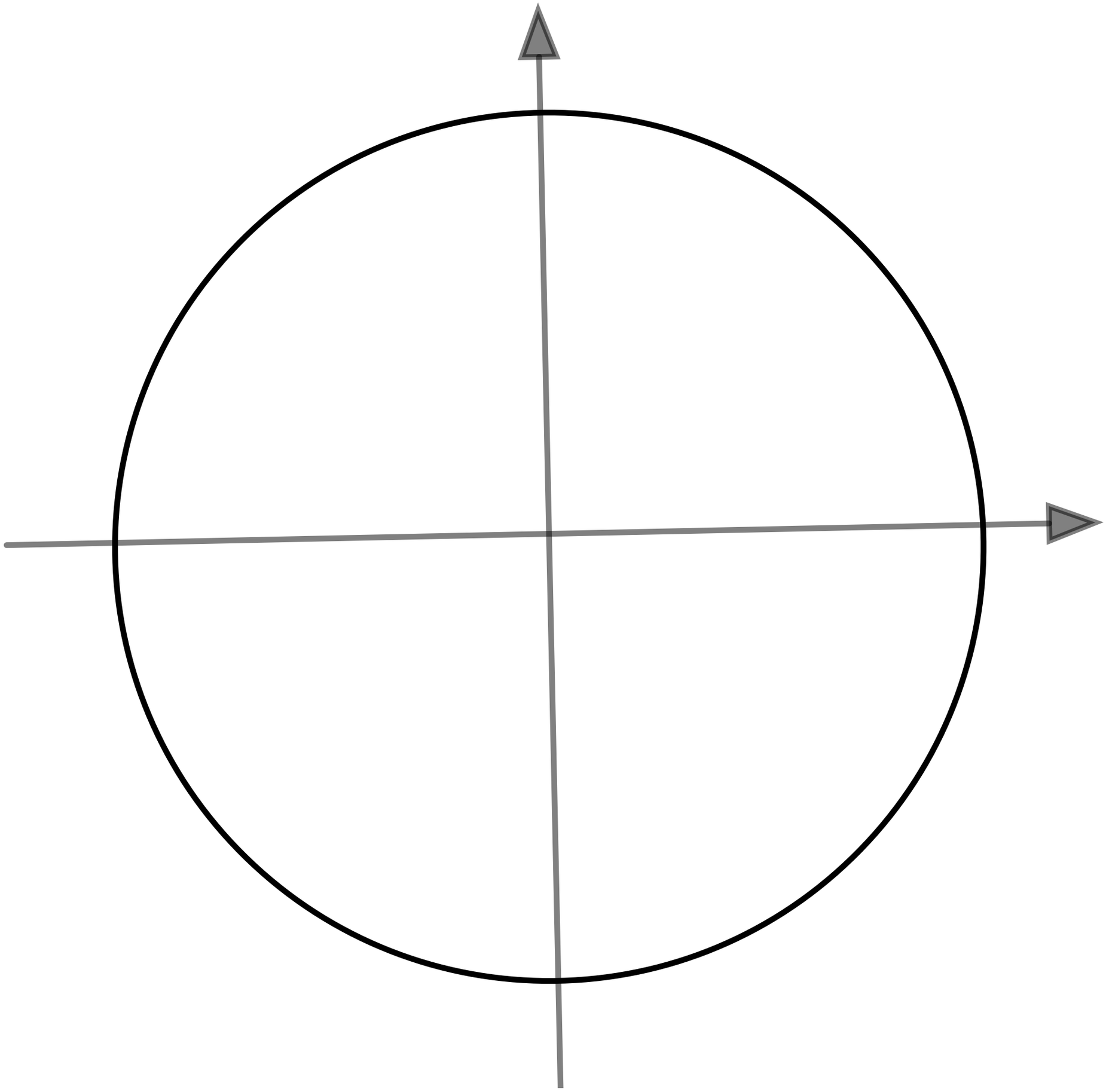

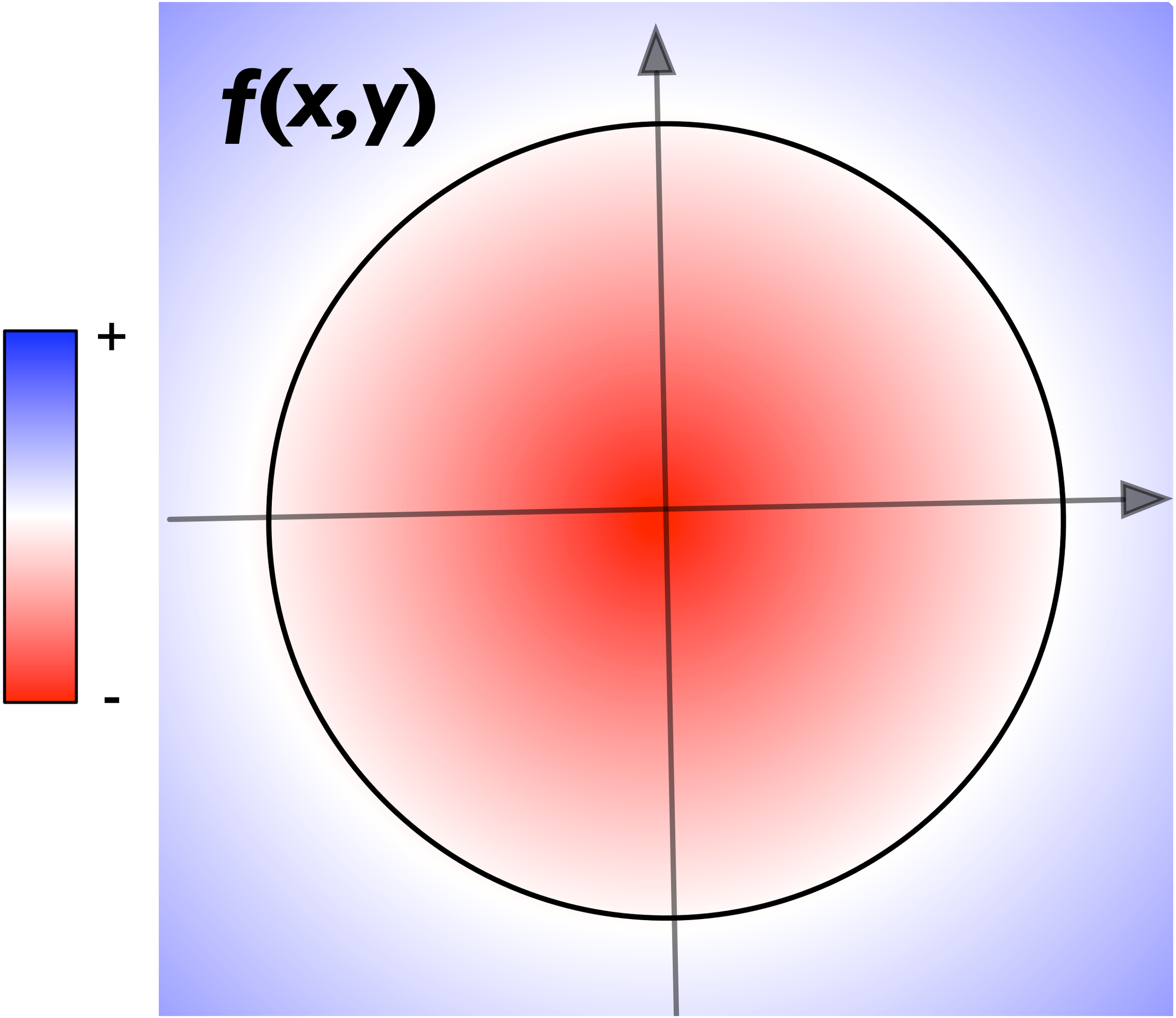
f(x,y)
+
-

Implicit equations

Chalkboard examples:

- Implicit 2D circle
- Implicit 2D line
- Implicit 3D plane

Implicit equations

- We call these equations “implicit” because although they imply a curve or surface, they cannot explicitly generate the points that comprise it.
- In order to generate points, we need another form…

Parametric equations

- *Parametric equations* offer the capability to generate continuous curves and surfaces.
- For curves, parametric equations take the form

$$x = f(t) \qquad y = g(t) \qquad z = h(t)$$

- For 3D surfaces, we have

$$x = f(s,t) \quad y = g(s,t) \quad z = h(s,t)$$

Parametric equations

- The *parameters* for these equations are scalars that range over a continuous (possibly infinite) interval.
- Varying the parameters over their entire intervals smoothly generates every point on the curve or surface.

Implicit equations

Chalkboard examples:

- Parametric 3D line
- Parametric sphere

Topics for Today

- Vectors
- Equations for curves and surfaces
- Barycentric Coordinates
  - Why barycentric coordinates?
  - What are barycentric coordinates?

Why barycentric coordinates?

- Triangles are the fundamental primitive used in 3D modeling programs.
- Triangles are stored as a sequence of three vectors, each defining a vertex.
- Often, we know information about the vertices, such as color, that we'd like to interpolate over the whole triangle.

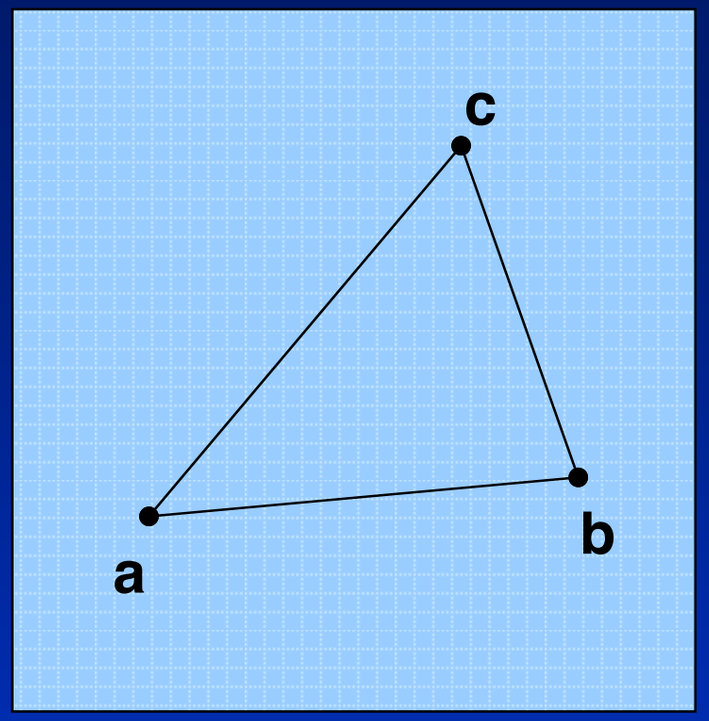

Barycentric Color Interpolation

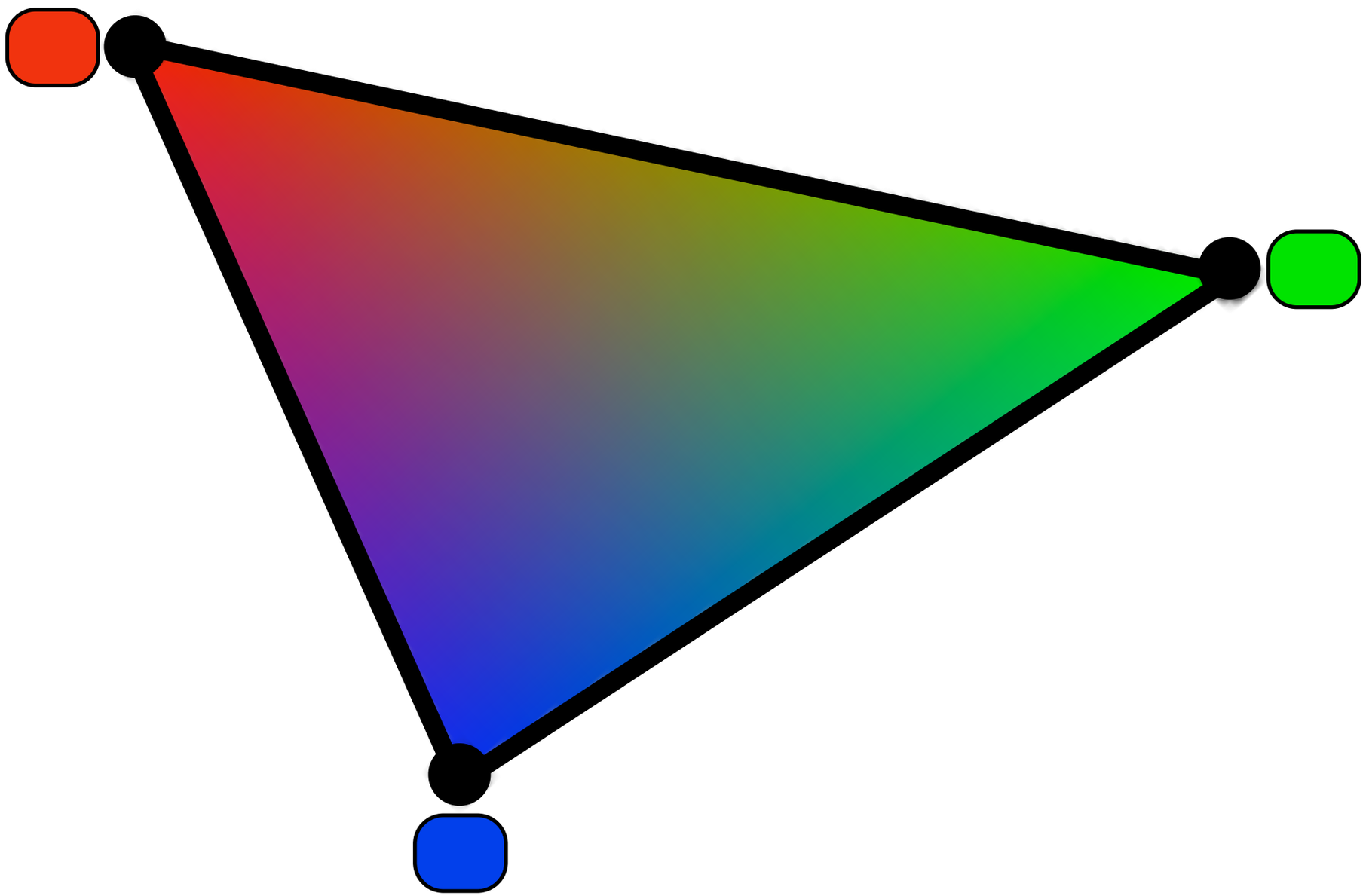

What are barycentric coordinates?

- The simplest way to do this interpolation is *barycentric coordinates*.
- The name comes from the Greek word *barus* (heavy) because the coordinates are weights assigned to the vertices.

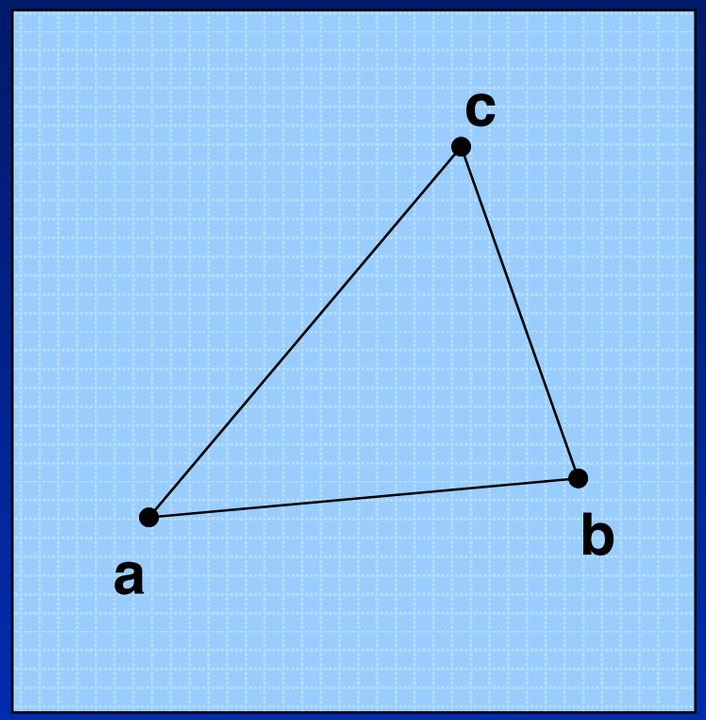

Goal: Assign a every point (x,y) or (x,y,z) to barycentric coordinates (α,β,γ).

Barycentric Coordinates

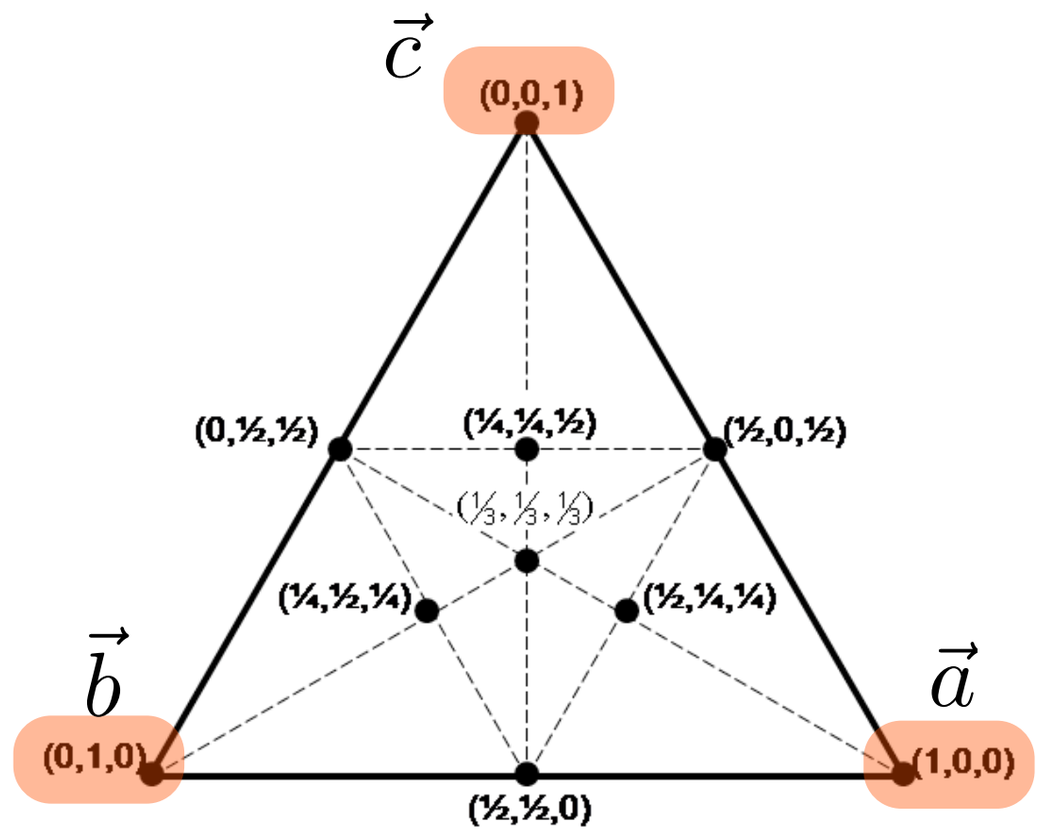

source: http://en.wikipedia.org/wiki/File:Barycentric_coordinates_1.png

Solution: $$\vec{x} = \alpha\vec{a} + \beta\vec{b} + \gamma\vec{c}$$

What are barycentric coordinates?

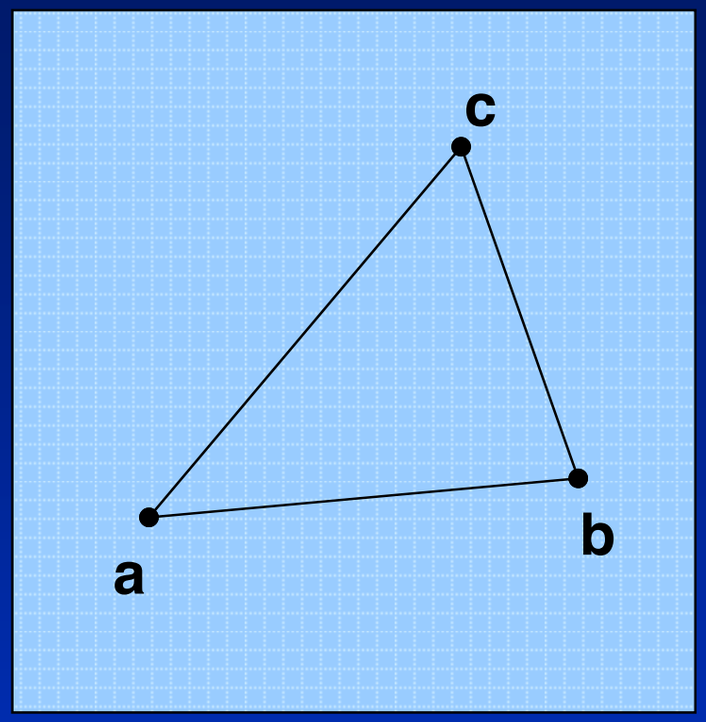

Some cool properties:

- Point **p** is inside the triangle if and only if

  $0 < \alpha < 1,$
  $0 < \beta < 1,$
  $0 < \gamma < 1$

- If one component is zero, **p** is on an edge.
- If two components are zero, **p** is on a vertex.
- The coordinates can be used as weighting factors for properties of the vertices, like color.

Barycentric Color Interpolation

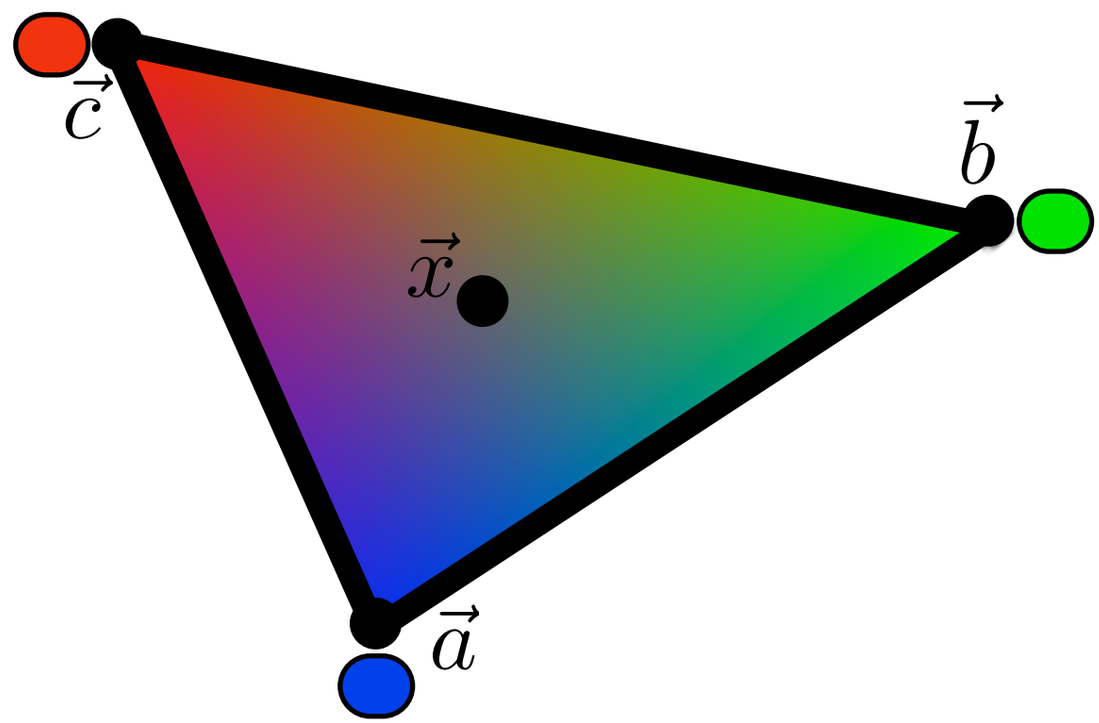

If: $\vec{x} = \alpha\vec{a} + \beta\vec{b} + \gamma\vec{c}$

Then: $\mathrm{color}(\vec{x}) = \alpha\mathrm{color}(\vec{a}) + \beta\mathrm{color}(\vec{b}) + \gamma\mathrm{color}(\vec{c})$

Barycentric coordinates

Chalkboard examples:

- Conversion from 2D Cartesian
- Conversion from 3D Cartesian

Transformations

Translation, rotation, scaling
- 2D
- 3D

Homogeneous coordinates

Transforming normals

Examples

Shirley Chapter 6

Uses of Transformations

- Modeling
  - build complex models by positioning simple components
  - transform from object coordinates to world coordinates
- Viewing
  - placing the virtual camera in the world
  - specifying transformation from world coordinates to camera coordinates
- Animation
  - vary transformations over time to create motion

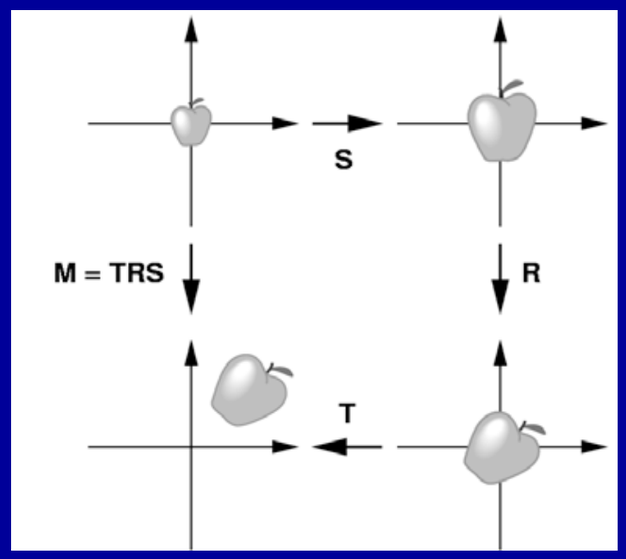

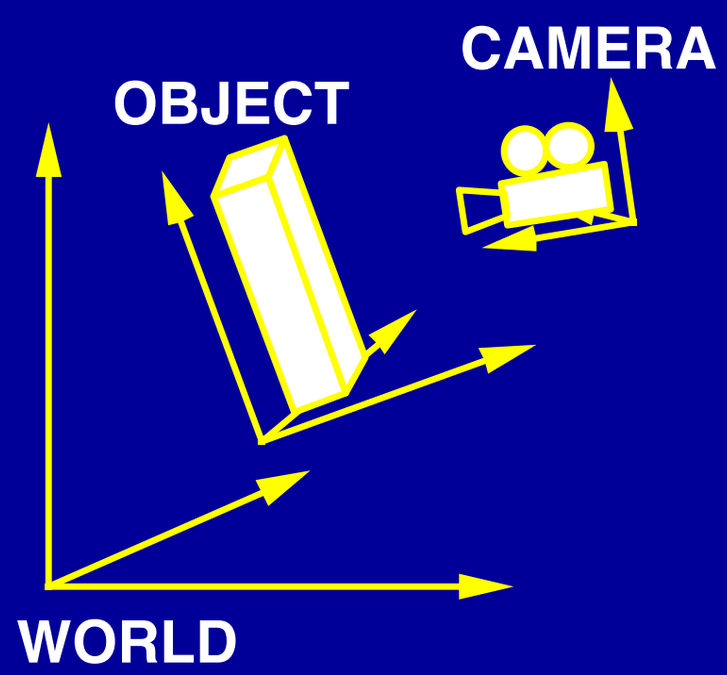

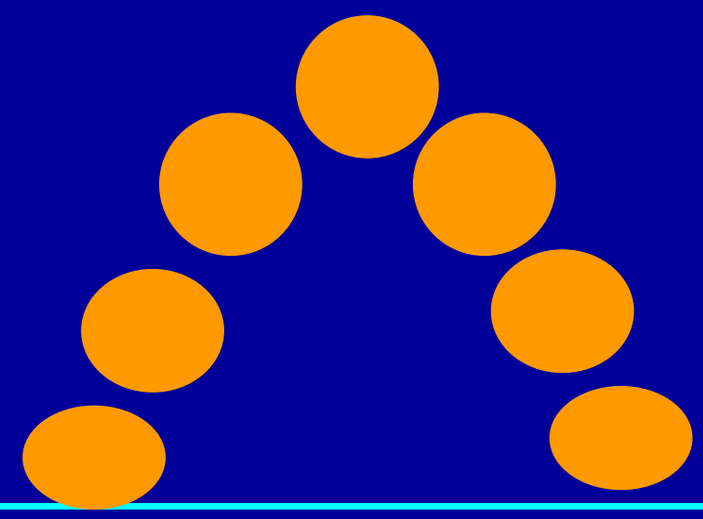

Rigid Body Transformations

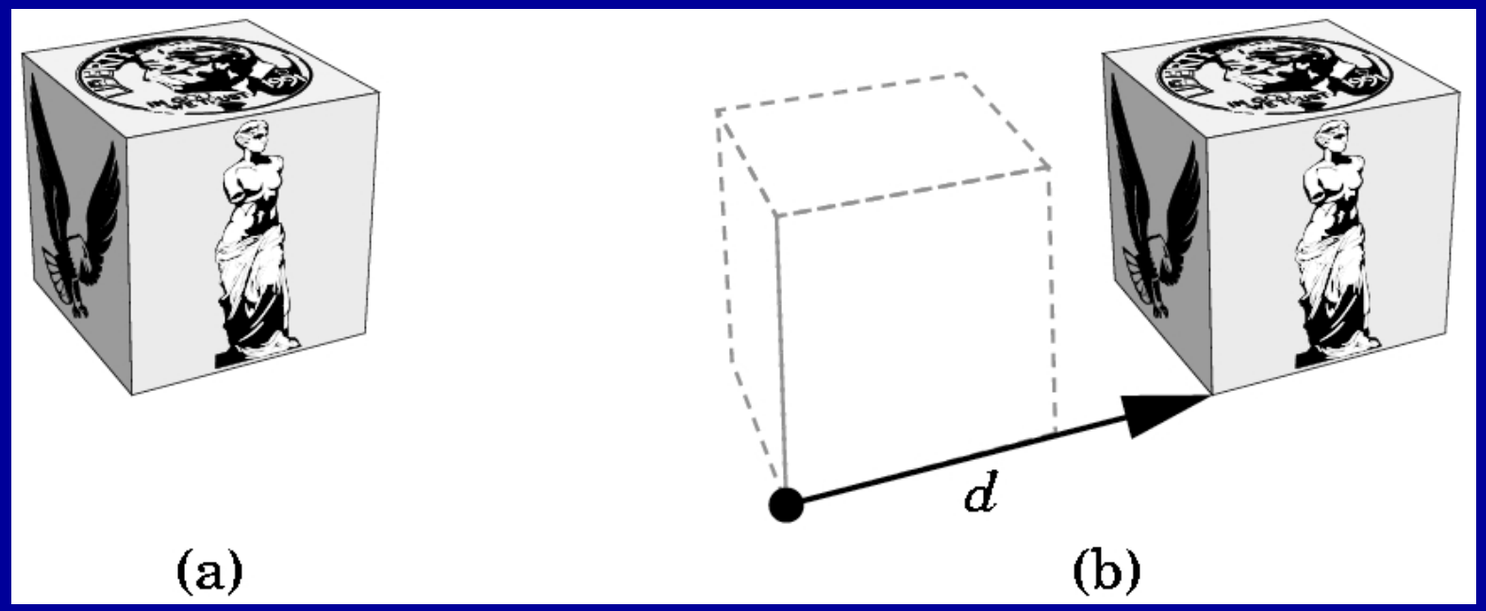

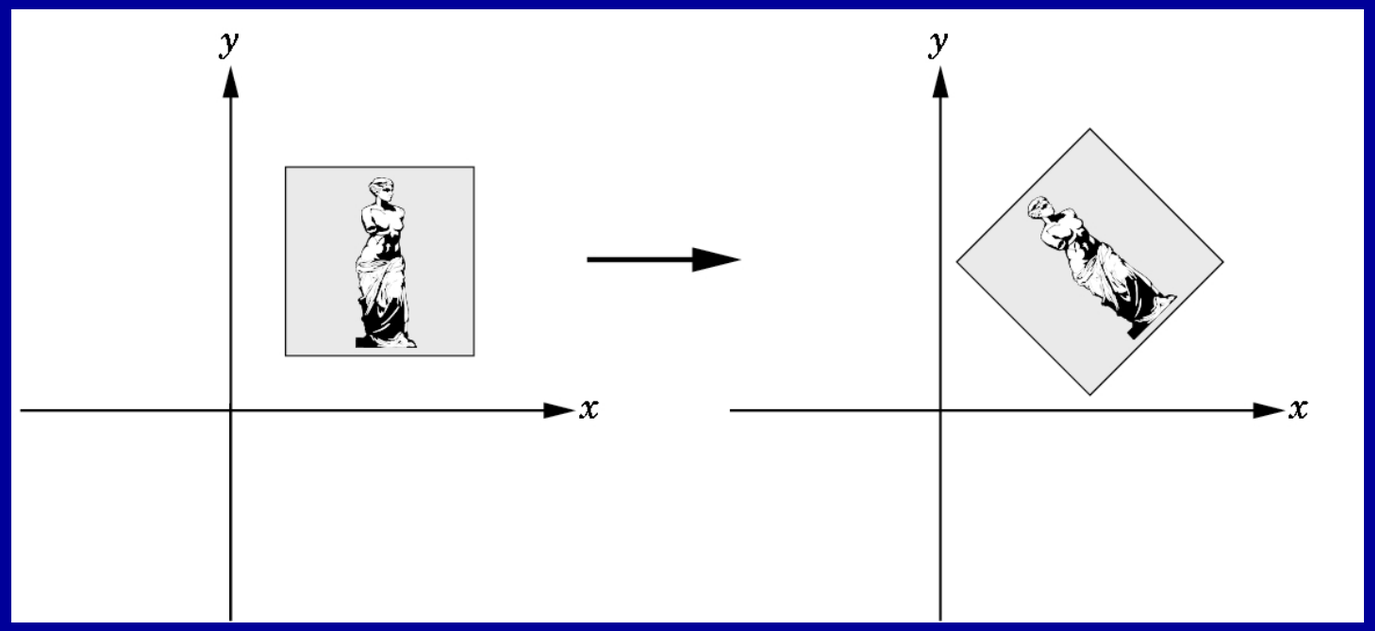

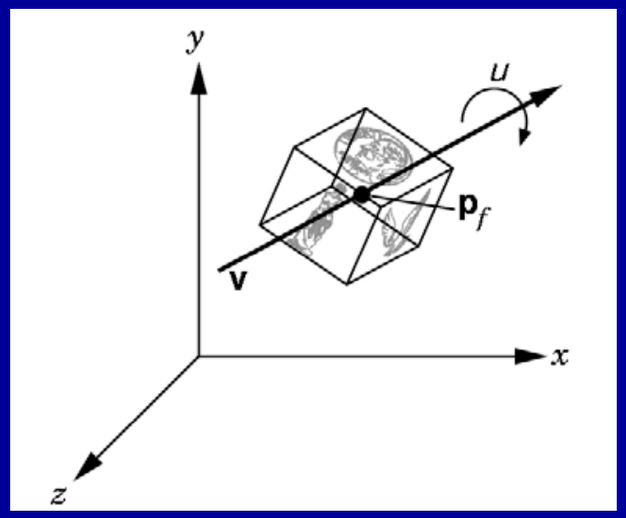

Rotation angle and line about which to rotate

Non-rigid Body Transformations

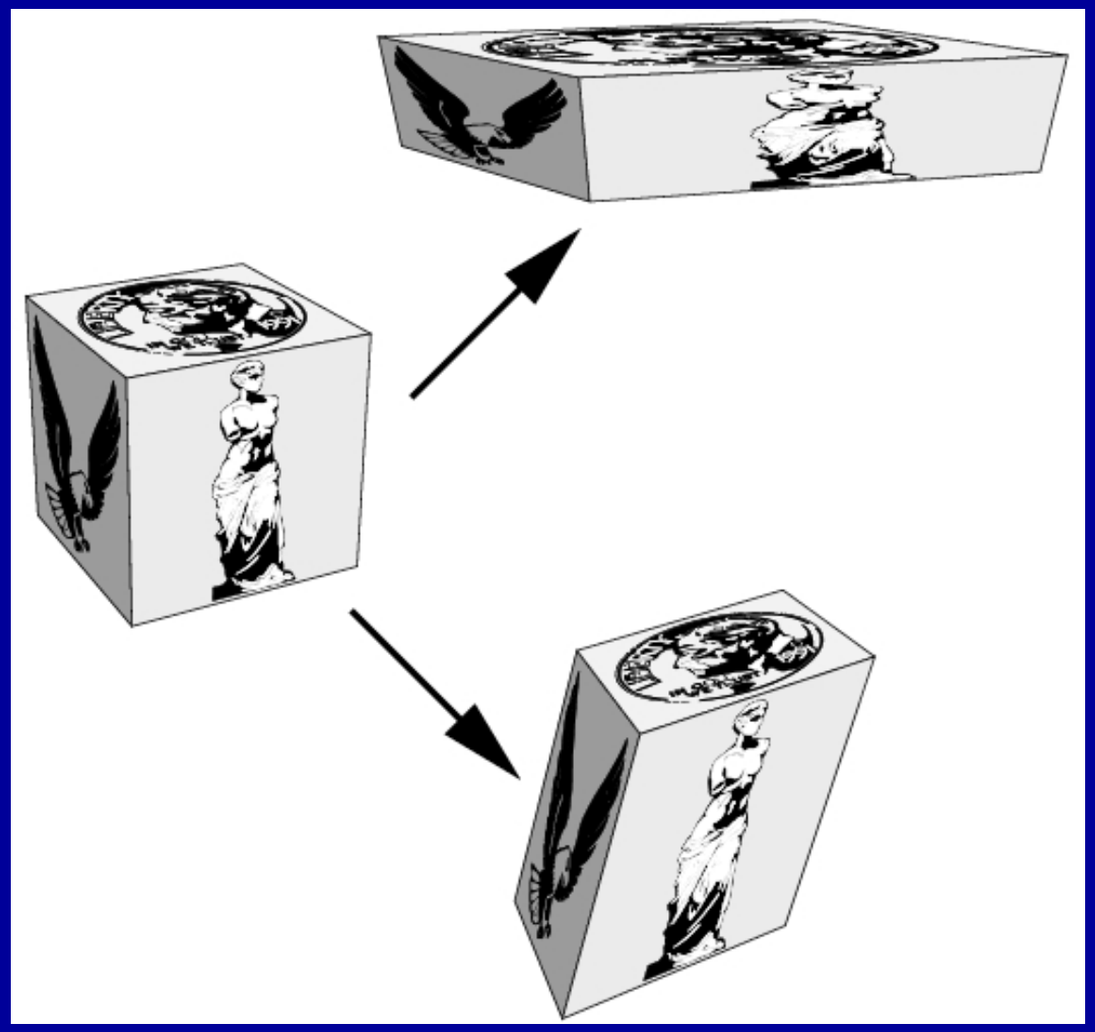

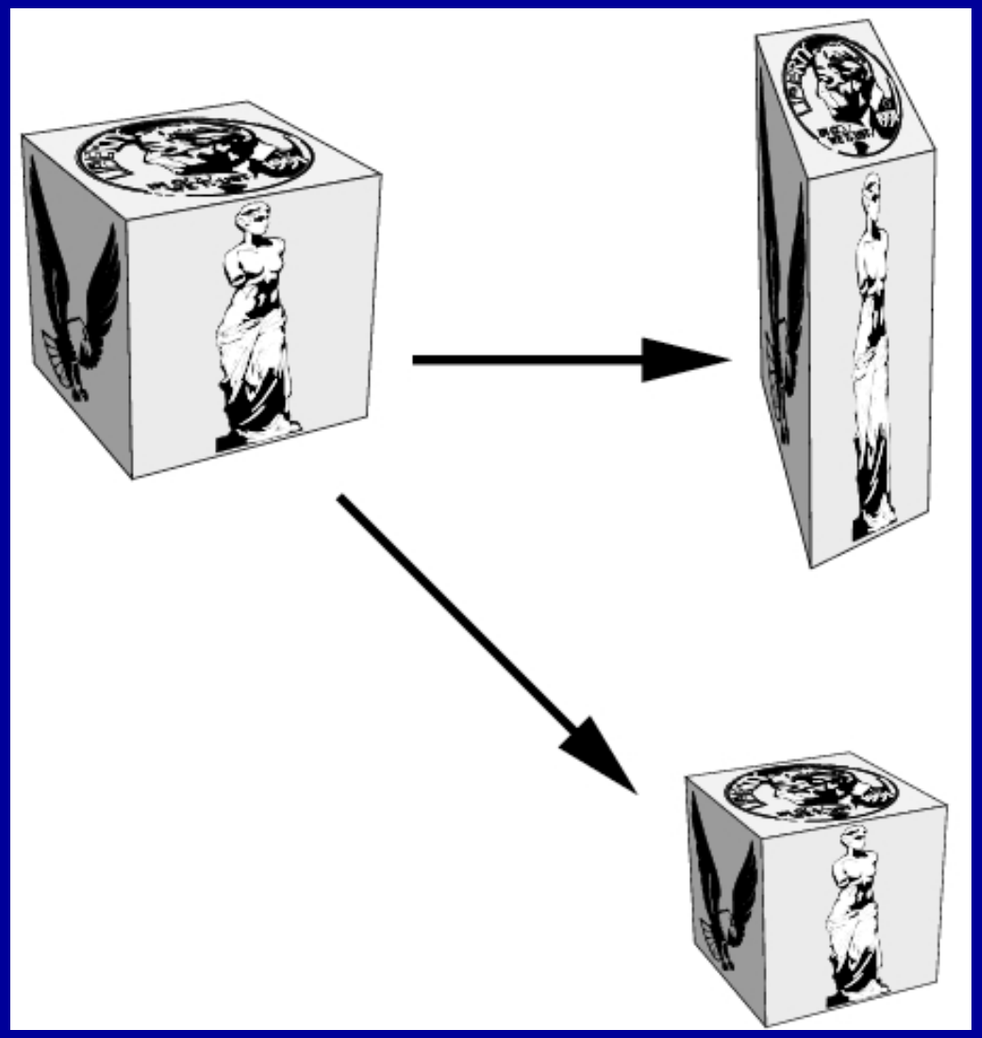

Distance between points on object do not remain constant

Basic 2D Transformations

Scale

Shear

Rotate

Composition of Transformations

- Created by stringing basic ones together, e.g.
  - *"translate p to the origin, rotate, then translate back"*

  can also be described as a rotation about p
- Any sequence of linear transformations can be collapsed into a single matrix formed by multiplying the individual matrices together
- Order matters!
- Can apply a whole sequence of transformations at once

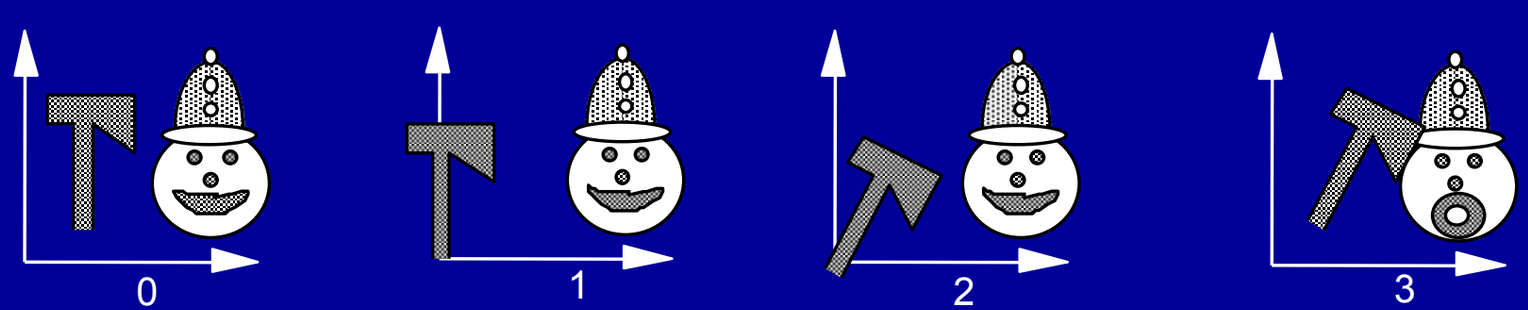

chalkboard

Translate to the origin, rotate, then translate back.

3D Transformations

- 3-D transformations are very similar to the 2-D case
- Scale
- Shear
- Rotation is a bit more complicated in 3-D
  - different rotation axes

chalkboard

Fixed Euler Angles for 3-D Rotations

- Independent rotations about each coordinate axis
  - angle interpolation for animation generates bizarre motions
  - rotations are order-dependent, and there are no conventions about the order to use
- Widely used anyway, because they're “simple”

Euler Angles for 3-D Rotations

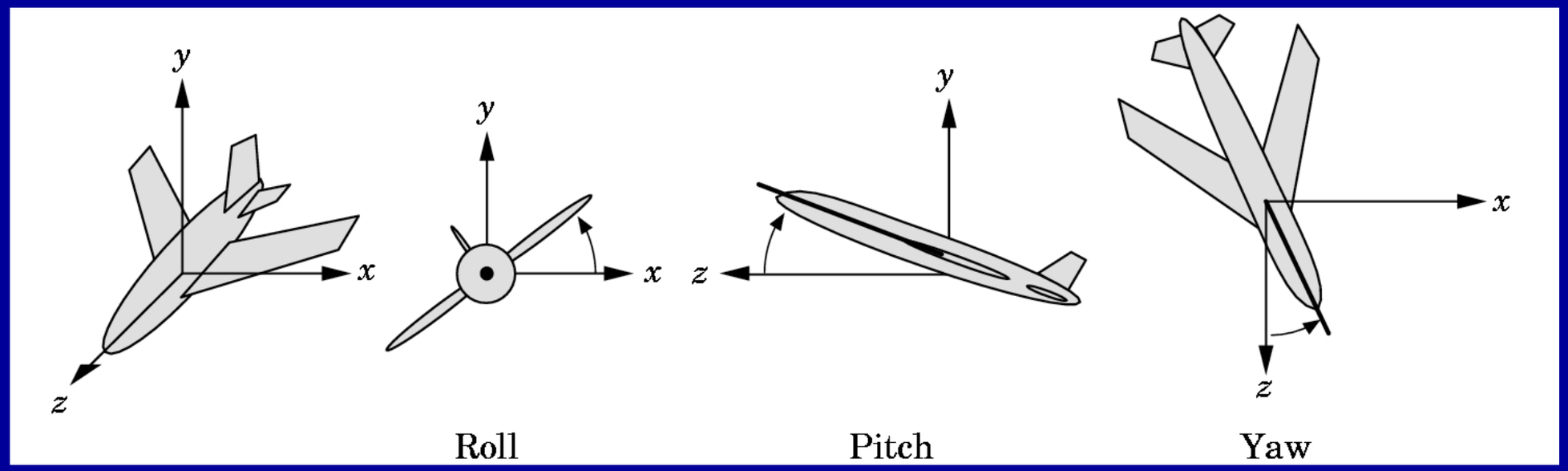

Other representations of 3D orientation

- Relative rather than fixed Euler angles
- Axis/Angle: rotate by α about axis V
- Quaternions:
  - a generalization of complex numbers
  - 3 give the rotation axis - magnitude is sin $\alpha/2$
  - 1 gives cos $\alpha/2$ (the amount of rotation)
  - unit magnitude - points on a 4-D unit sphere

But what about translation?

- Translation is not linear--how to represent as a matrix?

chalkboard

But what about translation?

- Translation is not linear--how to represent as a matrix?

chalkboard

- Trick: add extra coordinate to each vector
- This extra coordinate is the *homogeneous* coordinate, or *w*
- When extra coordinate is used, vector is said to be represented in *homogeneous coordinates*
- We call these matrices *Homogeneous* Transformations

W? Where did that come from?

- Practical answer:
  - W is a clever algebraic trick.
  - Don't worry about it too much. The w value will be 1.0 for the time being (until we get to perspective viewing transformations)

- More complete answer:
  - (x,y,w) coordinates form a 3D *projective space.*
  - All nonzero scalar multiples of (x,y,1) form an equivalence class of points that project to the same 2D Cartesian point (x,y).
  - For 3-D graphics, the 4D projective space point (x,y,z,w) maps to the 3D point (x,y,z) in the same way.

Homogeneous 2D Transformations

The basic 2D transformations become

Translate:

$$\begin{bmatrix} 1 & 0 & t_x \\ 0 & 1 & t_y \\ 0 & 0 & 1 \end{bmatrix}$$

Scale:

$$\begin{bmatrix} s_x & 0 & 0 \\ 0 & s_y & 0 \\ 0 & 0 & 1 \end{bmatrix}$$

Rotate:

$$\begin{bmatrix} \cos\theta & -\sin\theta & 0 \\ \sin\theta & \cos\theta & 0 \\ 0 & 0 & 1 \end{bmatrix}$$

Now *any* sequence of translate/scale/rotate operations can be combined into a single homogeneous matrix by multiplication.

3D transforms are modified similarly

Rigid Body Transformations

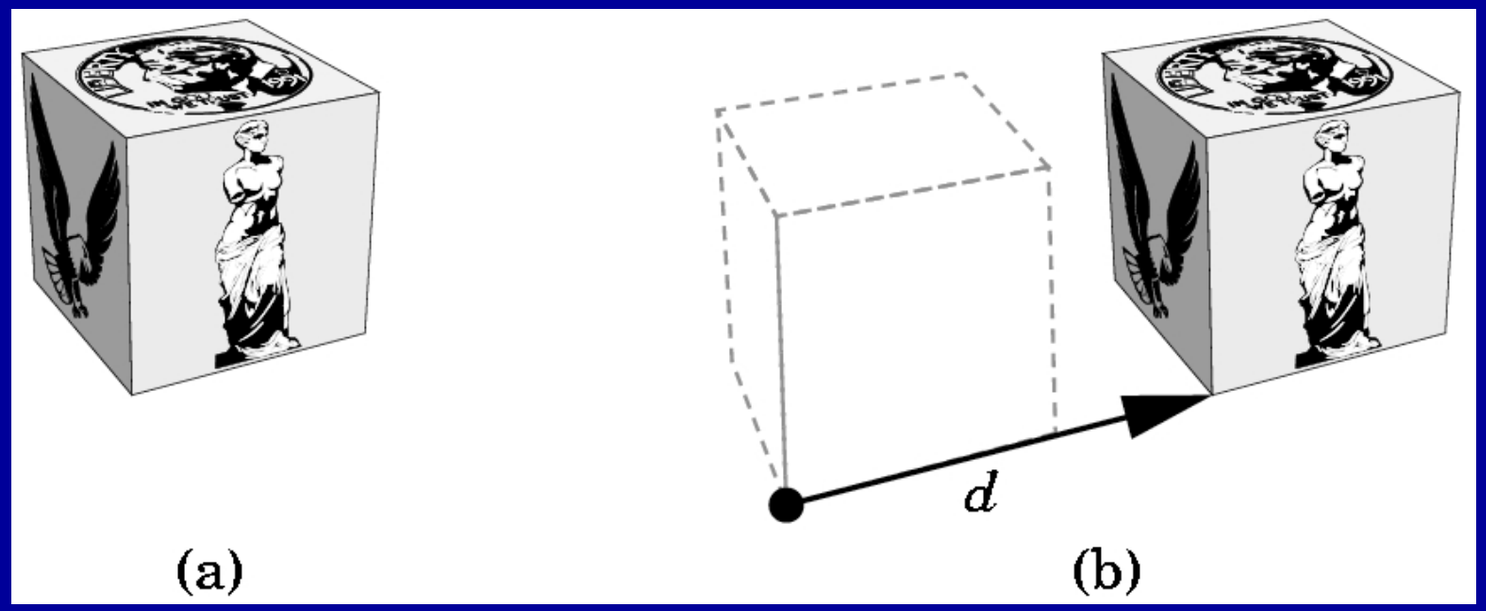

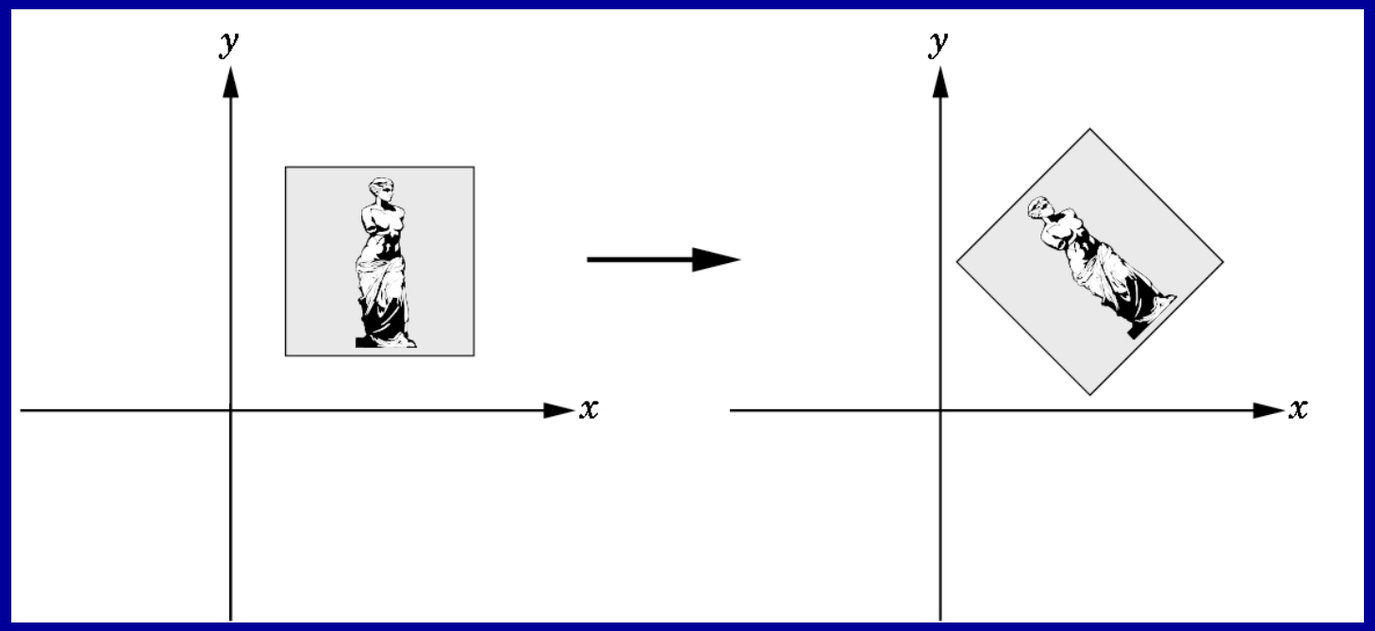

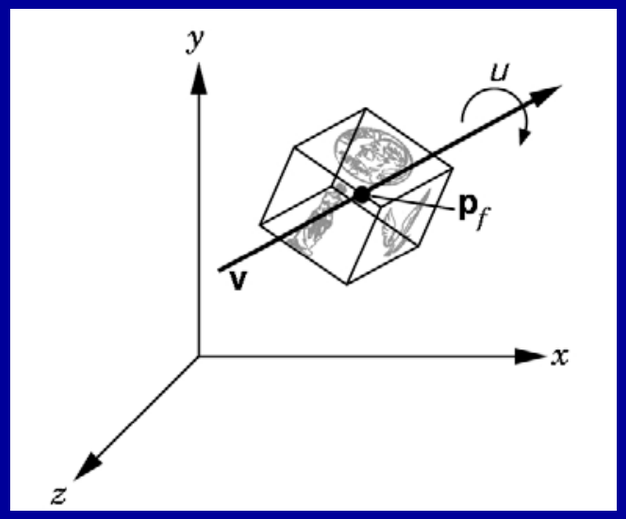

Rotation angle and line about which to rotate

Rigid Body Transformations

- A transformation matrix of the form

$$\begin{bmatrix} \mathbf{x_x} & \mathbf{x_y} & \mathbf{t_x} \\ \mathbf{y_x} & \mathbf{y_y} & \mathbf{t_y} \\ 0 & 0 & 1 \end{bmatrix}$$

where the upper 2x2 submatrix is a rotation matrix and column 3 is a translation vector, is a *rigid body transformation.*

- Any series of rotations and translations results in a rotation and translation of this form (and no change in the distance between vertices)

Sequences of Transformations

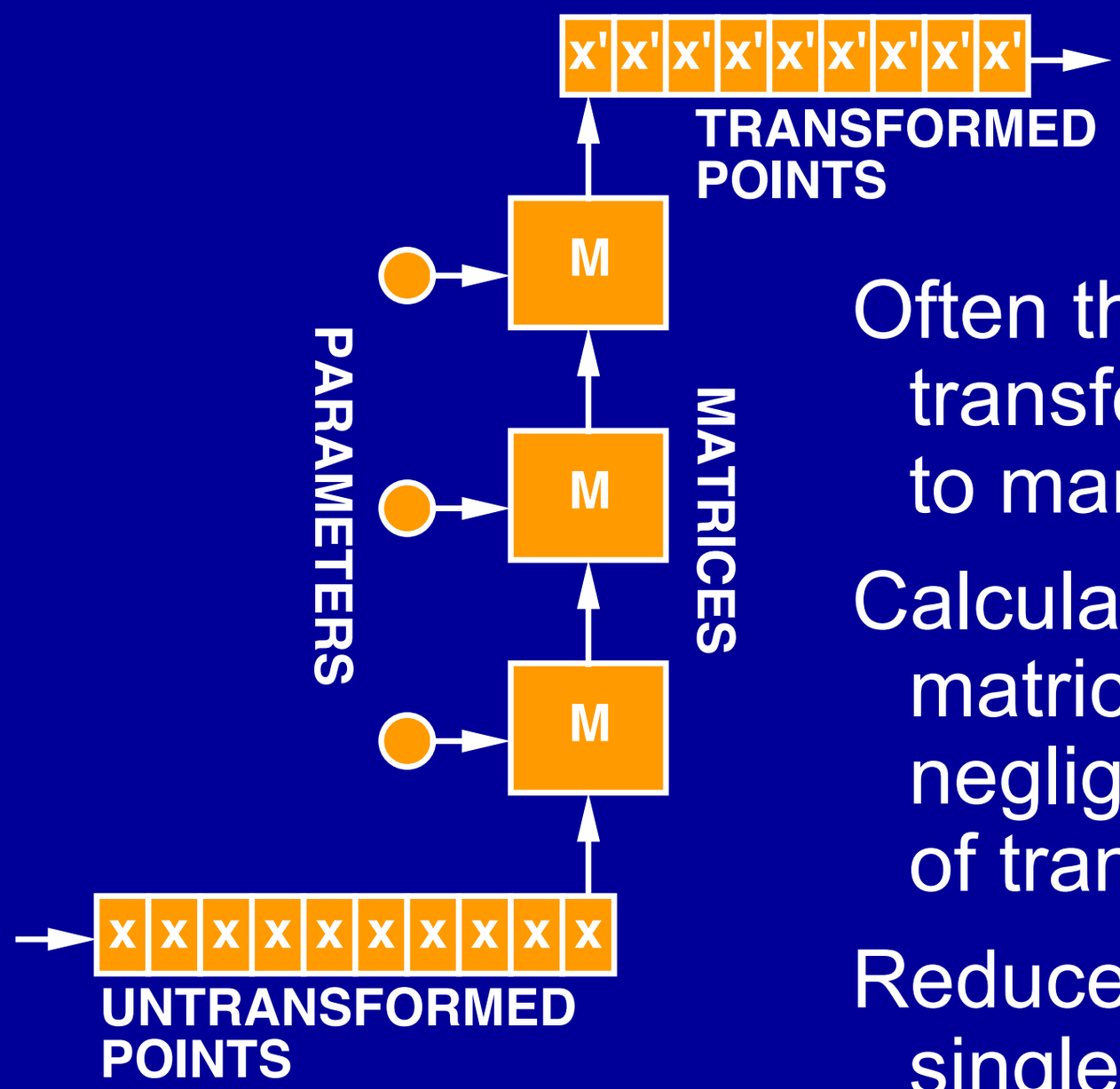

Often the same transformations are applied to many points

Calculation time for the matrices and combination is negligible compared to that of transforming the points

Reduce the sequence to a single matrix, then transform

Collapsing a Chain of Matrices.

- Consider the composite function ABCD, i.e. p' = ABCDp
- Matrix multiplication isn't commutative - the order is **important**
- But matrix multiplication is associative, so can calculate from right to left or left to right: ABCD = (((AB) C) D) = (A (B (CD))).
- Iteratively replace *either* the leading or the trailing pair by its product

Premultiply		Postmultiply
$M \leftarrow D$		$M \leftarrow A$
$M \leftarrow CM$	**or**	$M \leftarrow MB$
$M \leftarrow BM$		$M \leftarrow MC$
$M \leftarrow AM$		$M \leftarrow MD$

both give the same result.

What is a Normal?– refresher

Indication of outward facing direction for lighting and shading

Order of definition of vertices in OpenGL

Right hand rule

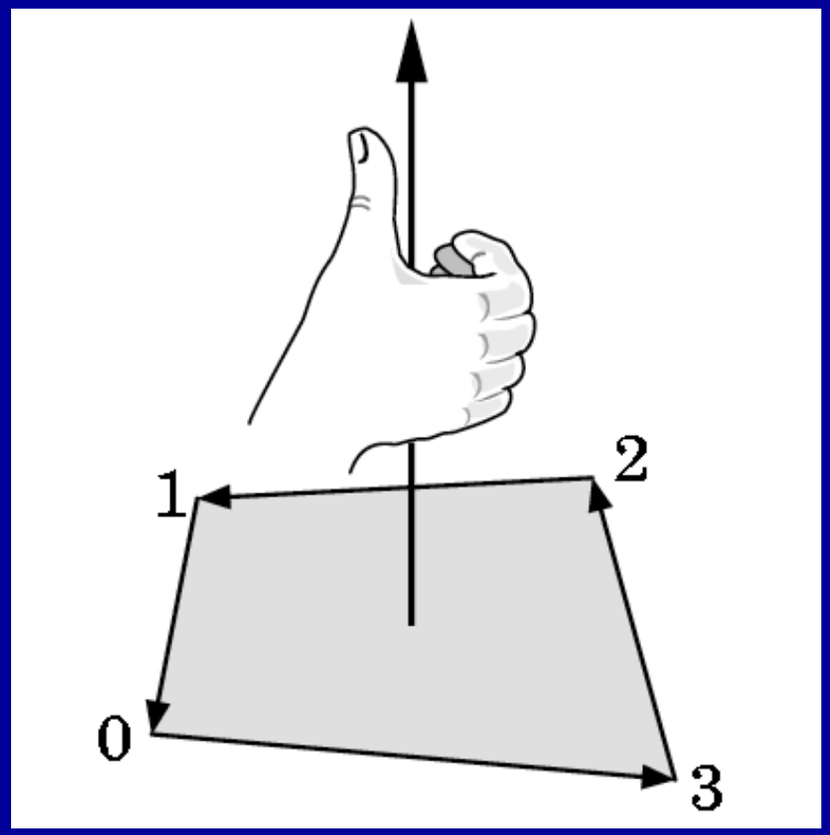

Transforming Normals

- It's tempting to think of normal vectors as being like porcupine quills, so they would transform like points
- Alas, it's not so.
- We need a different rule to transform normals.

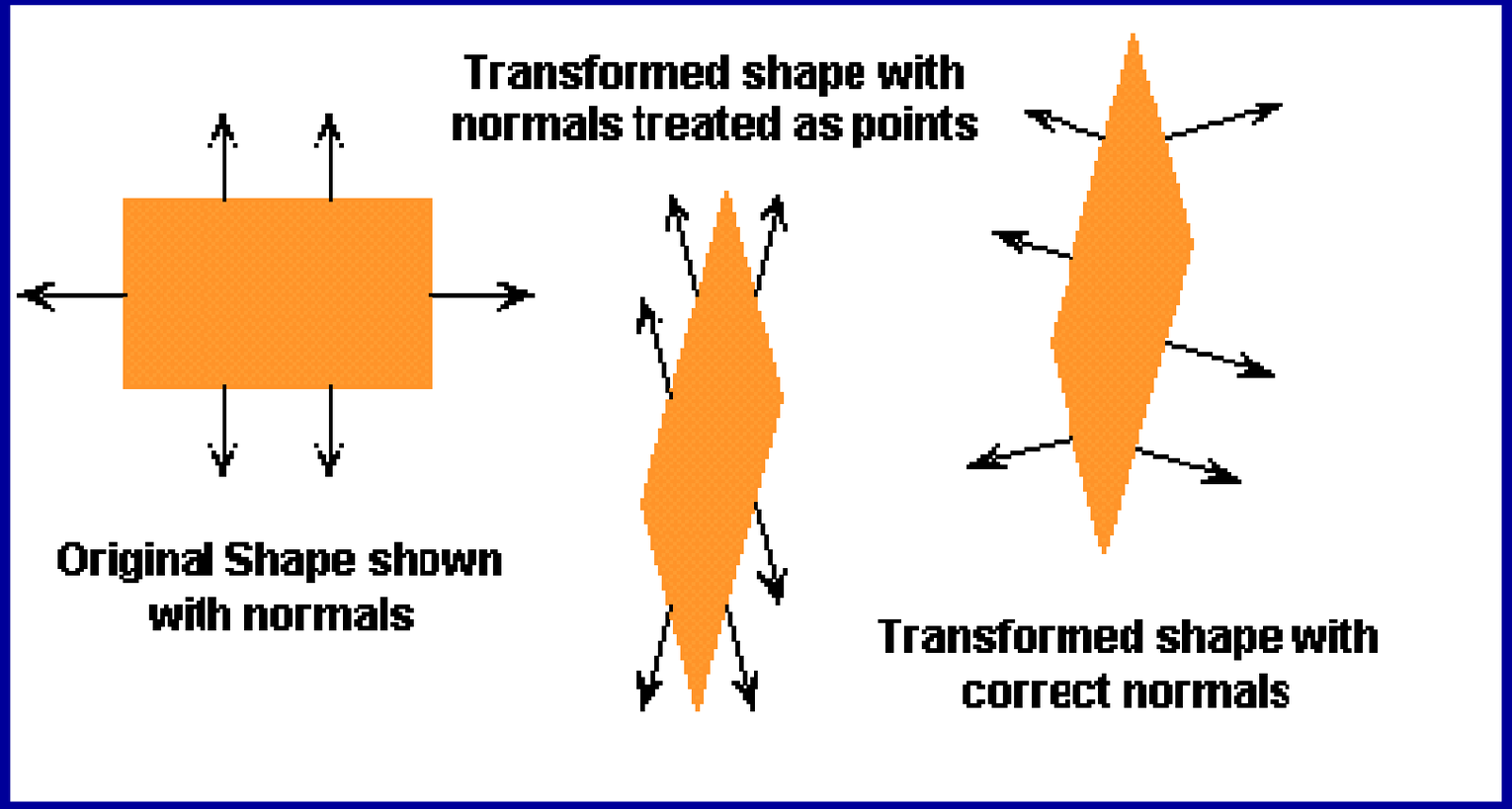

chalkboard

Examples

- Modeling with primitive shapes

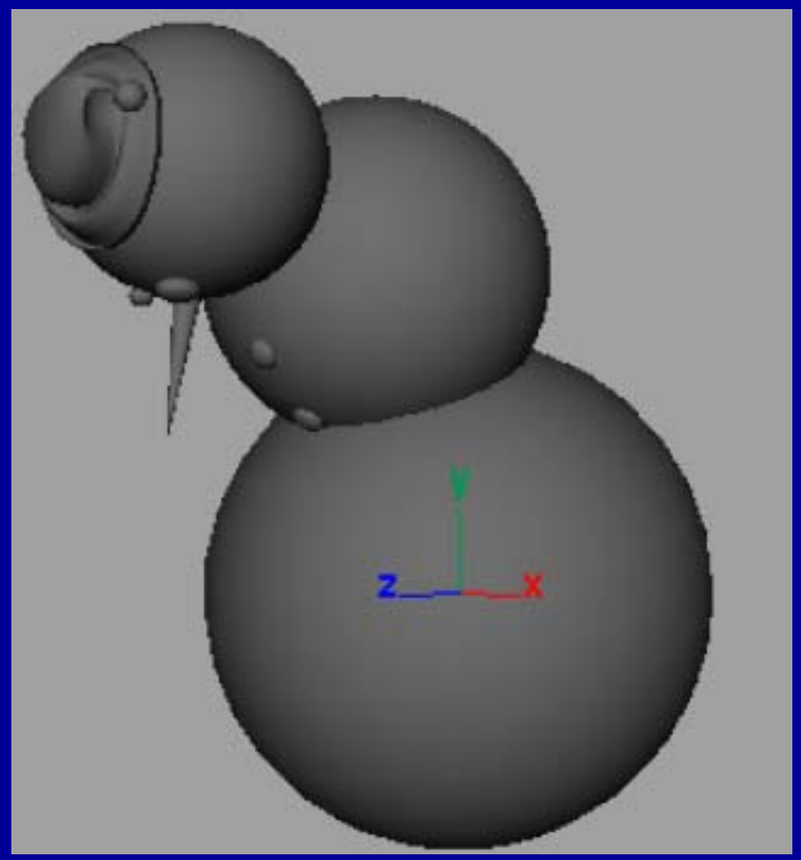

Announcements

- Reading for Thursday: Shirley Ch: 2,6, & 7
- Project 1 due next Tuesday...
  - Style: 10%
  - Any questions?
- Bulletin Board Mini-Demonstration