15-213

Virtual Memory
October 26, 2000

Topics

- Motivations for VM
- Address translation
- Accelerating translation with TLBs

Motivations for Virtual Memory

- **Use Physical DRAM as a Cache for the Disk**
  - **Address space of a process can exceed physical memory size**
  - **Sum of address spaces of multiple processes can exceed physical memory**
- **Simplify Memory Management**
  - **Multiple processes resident in main memory.**
    - Each process with its own address space
  - **Only "active" code and data is actually in memory**
    - Allocate more memory to process as needed.

Provide Protection

- **One process can't interfere with another.**
  - because they operate in different address spaces.
- **User process cannot access privileged information**
  - different sections of address spaces have different permissions.

Motivation #1: DRAM a "Cache" for Disk

Full address space is quite large:

- 32-bit addresses: ~4,000,000,000 (4 billion) bytes
- 64-bit addresses: ~16,000,000,000,000,000,000 (16 quintillion) bytes

Disk storage is ~156X cheaper than DRAM storage

- 8 GB of DRAM: ~ $10,000
- 8 GB of disk: ~ $64

To access large amounts of data in a cost-effective manner, the bulk of the data must be stored on disk

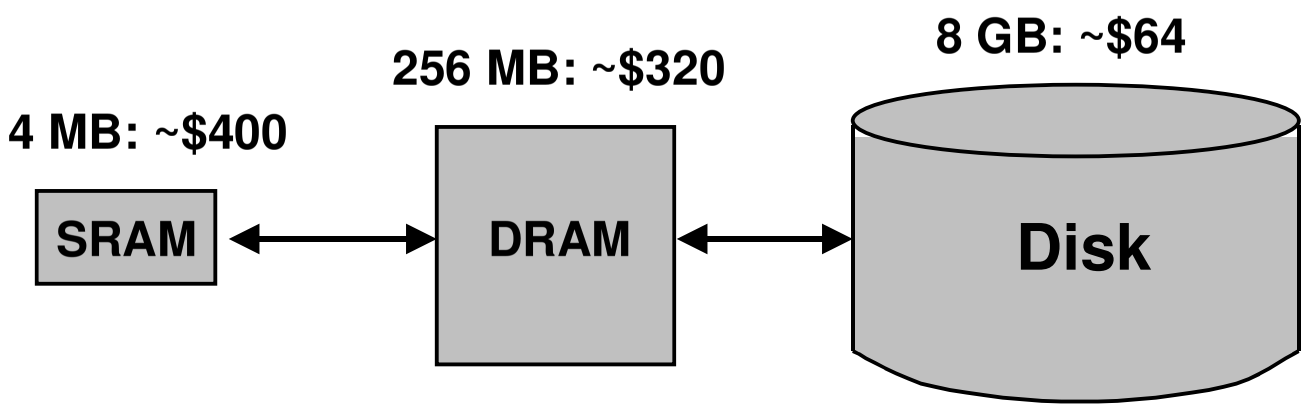

Levels in Memory Hierarchy

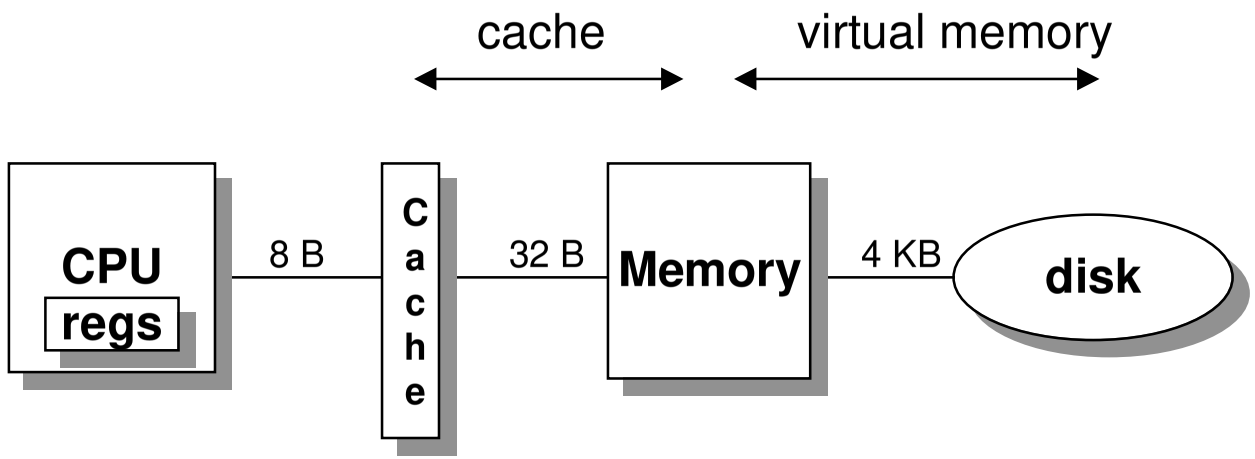

	Register	Cache	Memory	Disk Memory
size:	32 B	32 KB-4MB	128 MB	30 GB
speed:	3 ns	6 ns	60 ns	8 ms
$/Mbyte:		$100/MB	$1.25/MB	$0.008/MB
line size:	8 B	32 B	4 KB	

larger, slower, cheaper →

DRAM vs. SRAM as a "Cache"

DRAM vs. disk is more extreme than SRAM vs. DRAM

- **Access latencies:**
  - DRAM ~10X slower than SRAM
  - Disk ~**100,000X** slower than DRAM
- **Importance of exploiting spatial locality:**
  - First byte is ~**100,000X** slower than successive bytes on disk
    - » vs. ~4X improvement for page-mode vs. regular accesses to DRAM
- **Bottom line:**
  - Design decisions made for DRAM caches driven by enormous cost of misses

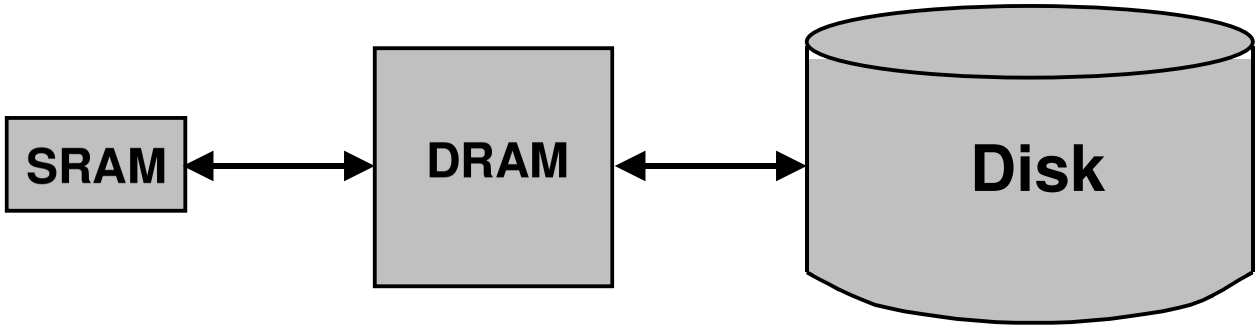

Impact of These Properties on Design

If DRAM was to be organized similar to an SRAM cache, how would we set the following design parameters?

- **Line size?**
  - Large, since disk better at transferring large blocks
- **Associativity?**
  - High, to mimimize miss rate
- **Write through or write back?**
  - Write back, since can't afford to perform small writes to disk

What would the impact of these choices be on:

- **miss rate**
  - Extremely low. << 1%
- **hit time**
  - Must match cache/DRAM performance
- **miss latency**
  - Very high. ~20ms
- **tag storage overhead**
  - Low, relative to block size

Locating an Object in a "Cache"

SRAM Cache

- **Tag stored with cache line**
- **Maps from cache block to memory blocks**
  - From cached to uncached form
- **No tag for block not in cache**
- **Hardware retrieves information**
  - can quickly match against multiple tags

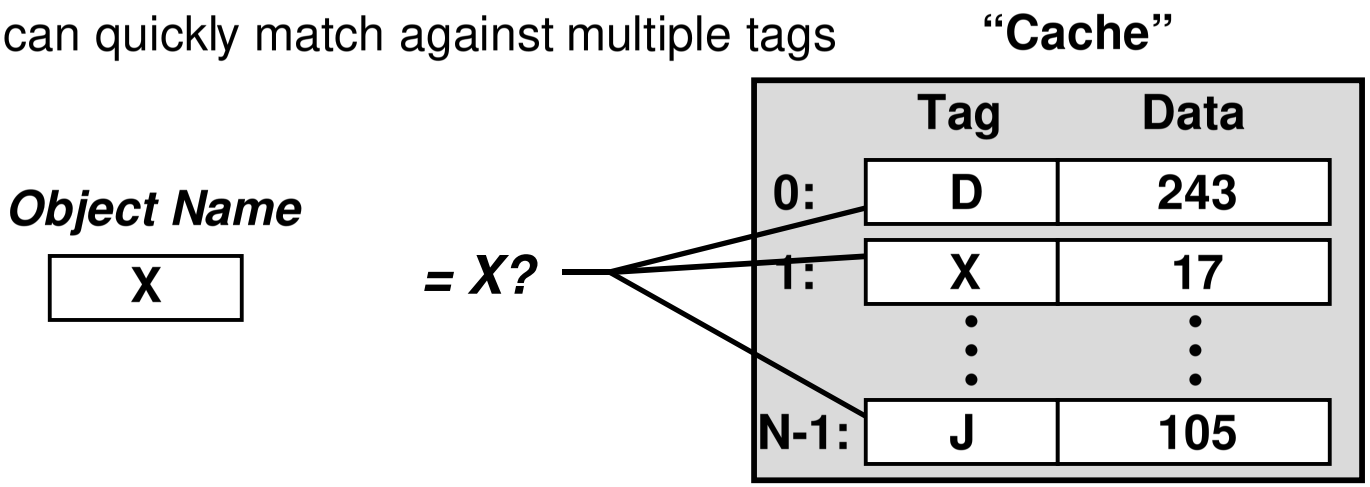

Locating an Object in a "Cache" (cont.)

DRAM Cache

- **Each allocate page of virtual memory has entry in page table**
- **Mapping from virtual pages to physical pages**
  - From uncached form to cached form
- **Page table entry even if page not in memory**
  - Specifies disk address
- **OS retrieves information**

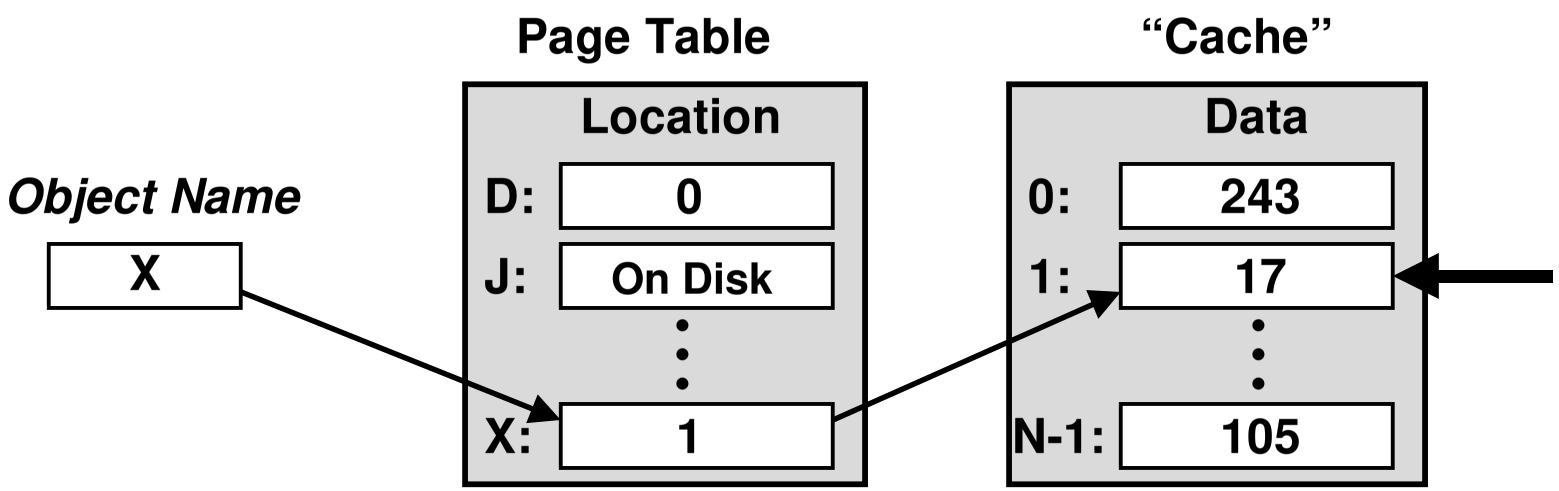

A System with Physical Memory Only

Examples:

- most Cray machines, early PCs, nearly all embedded systems, etc.

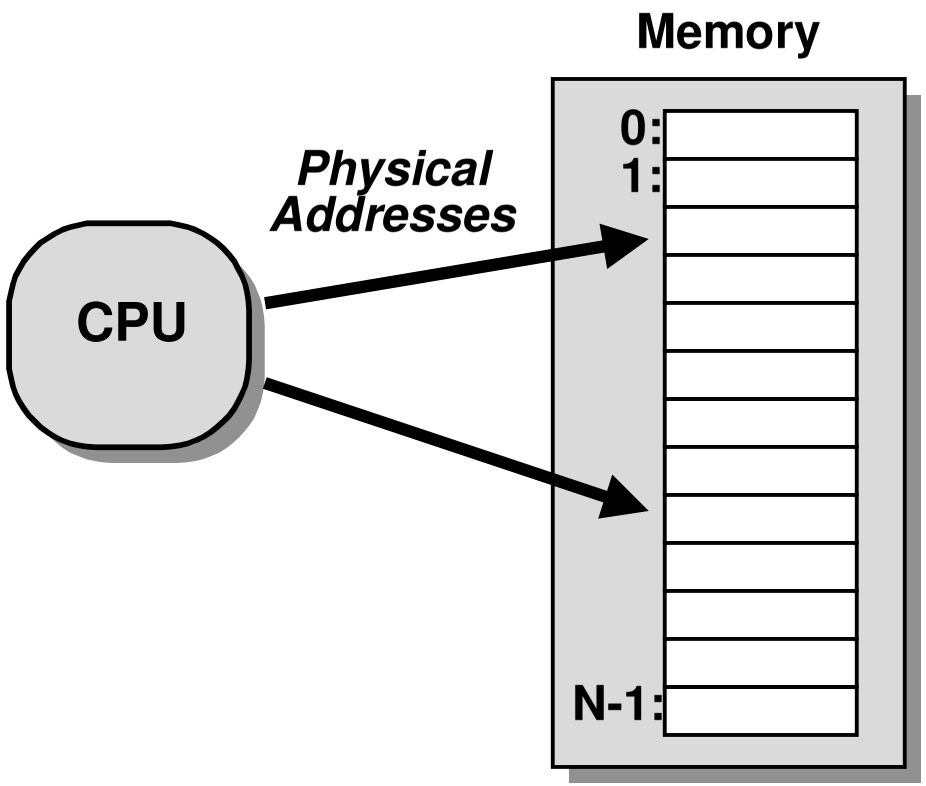

Addresses generated by the CPU point directly to bytes in physical memory

A System with Virtual Memory

Examples:

- workstations, servers, modern PCs, etc.

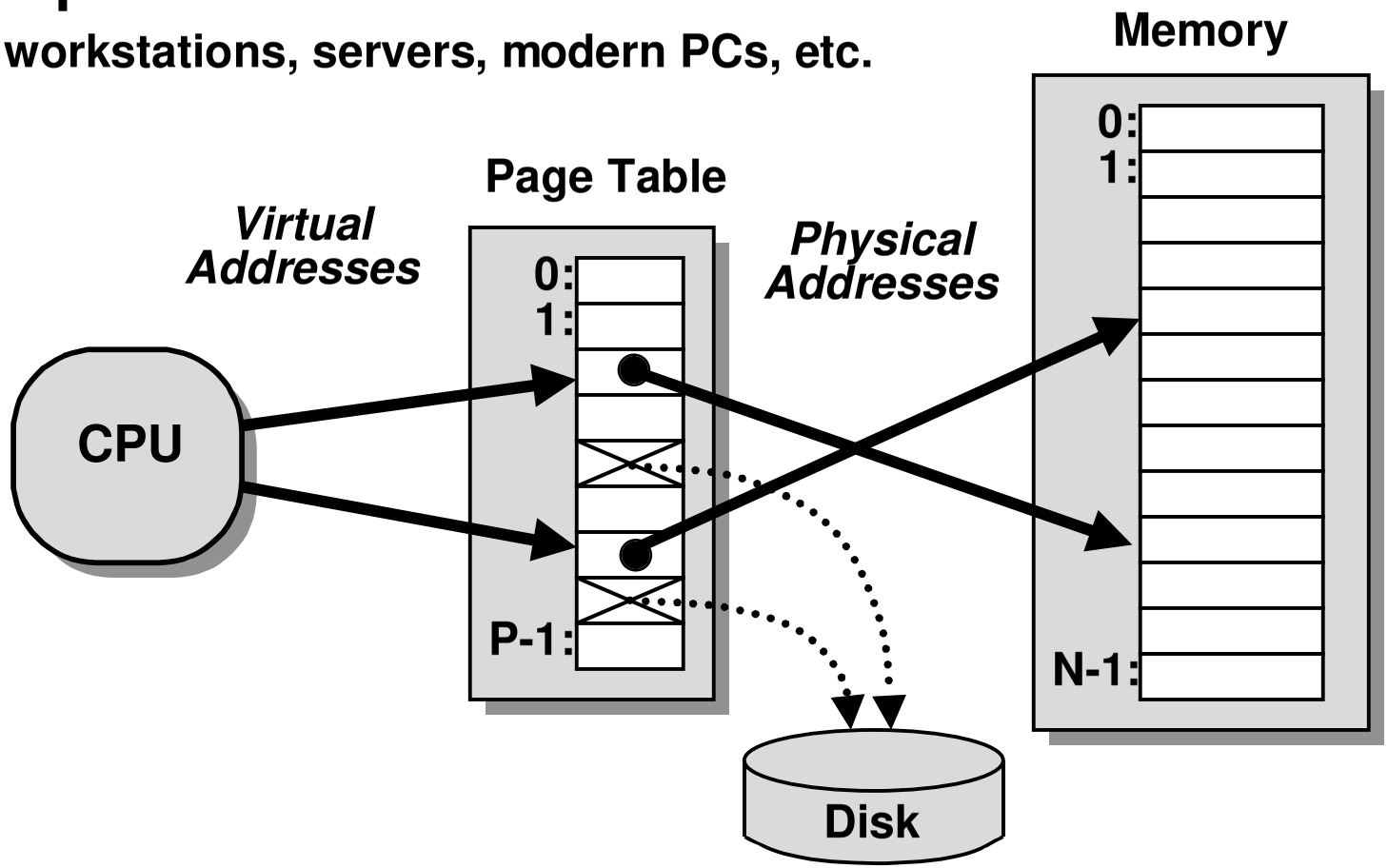

<u>Address Translation:</u> Hardware converts *virtual addresses* to *physical addresses* via an OS-managed lookup table (*page table*)

Page Faults (Similar to "Cache Misses")

What if an object is on disk rather than in memory?

- **Page table entry indicates virtual address not in memory**
- **OS exception handler invoked to move data from disk into memory**
  - current process suspends, others can resume
  - OS has full control over placement, etc.

Before fault

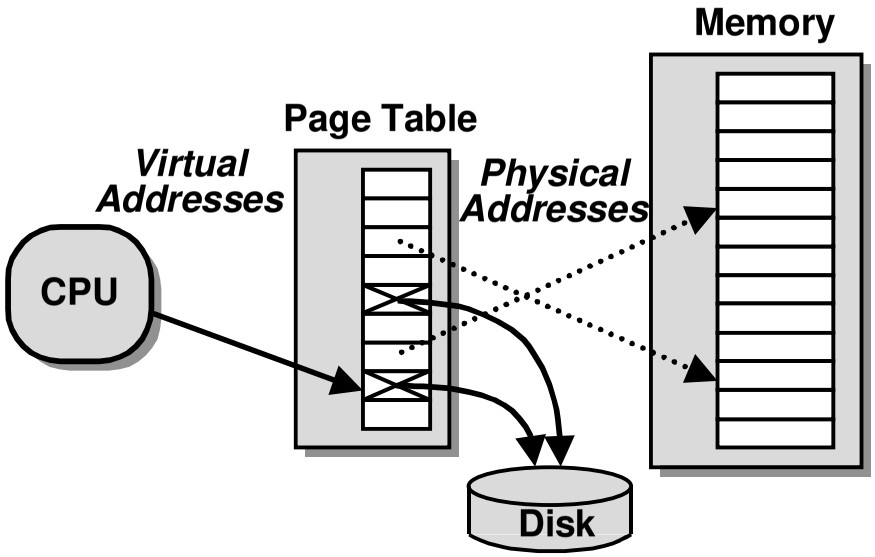

After fault

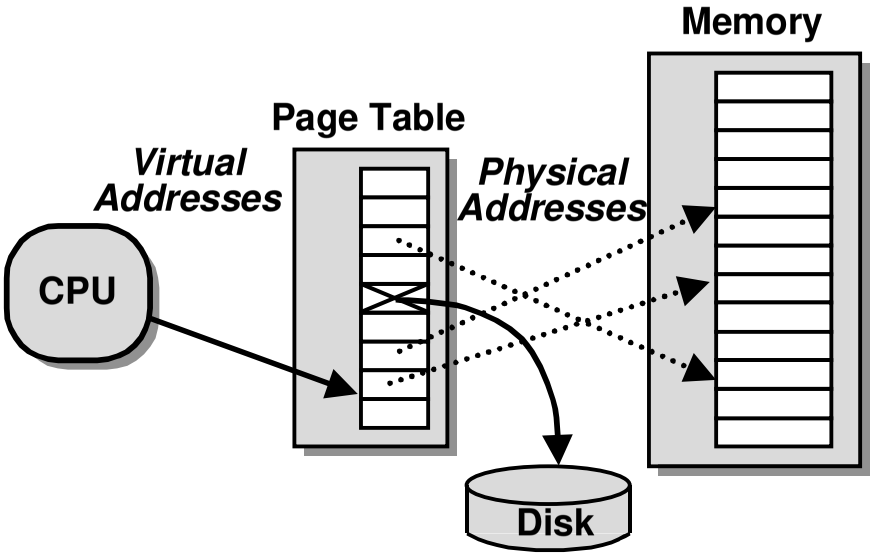

Servicing a Page Fault

Processor Signals Controller

- Read block of length P starting at disk address X and store starting at memory address Y

Read Occurs

- Direct Memory Access (DMA)
- Under control of I/O controller

I / O Controller Signals Completion

- Interrupt processor
- OS resumes suspended process

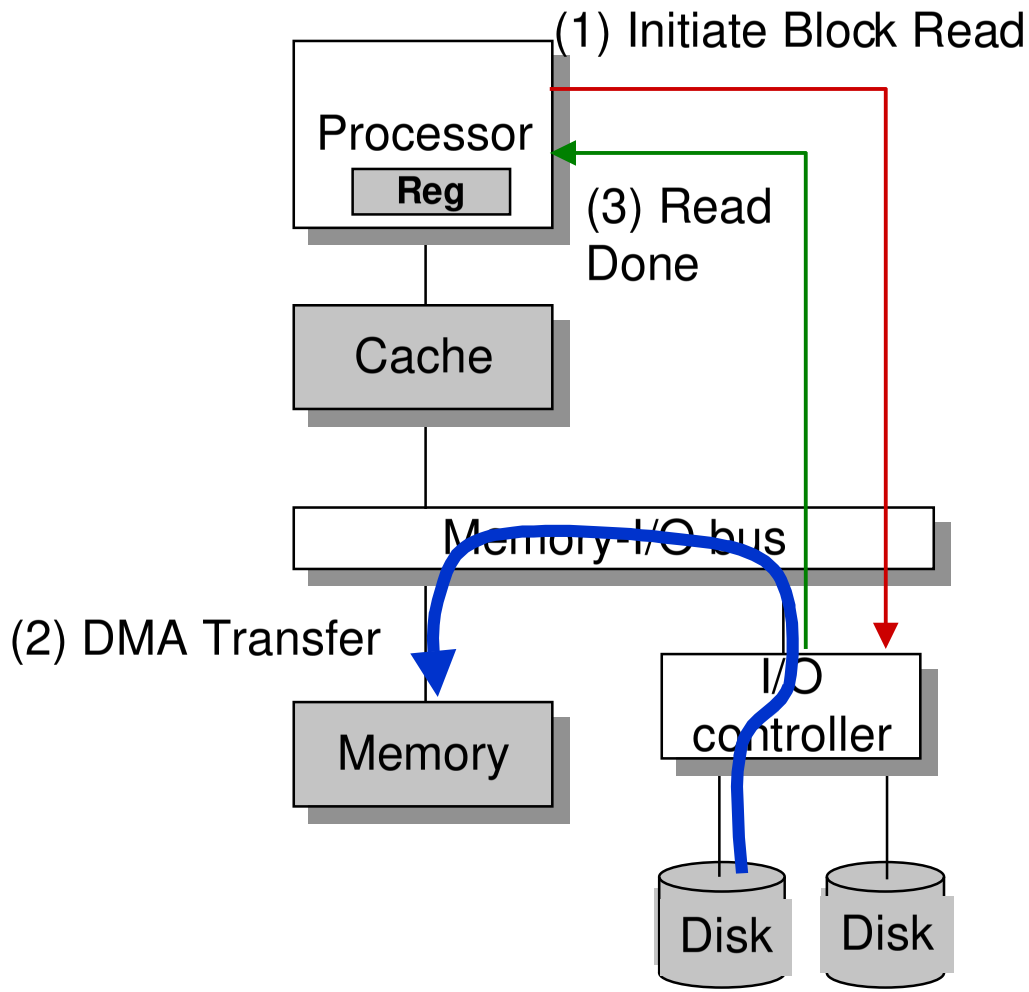

Motivation #2: Memory Management

Multiple processes can reside in physical memory.

How do we resolve address conflicts?

- **what if two processes access something at the same address?**

Linux/x86 process memory image

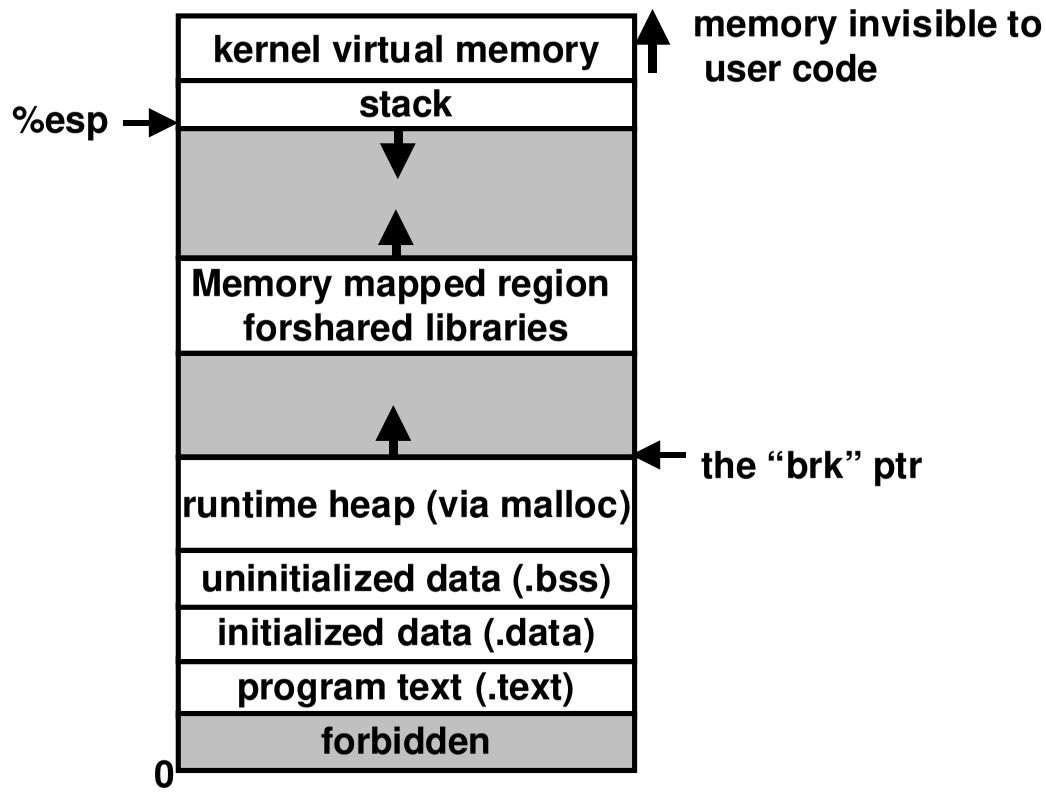

Solution: Separate Virtual Addr. Spaces

- **Virtual and physical address spaces divided into equal-sized blocks**
  - blocks are called "pages" (both virtual and physical)
- **Each process has its own virtual address space**
  - operating system controls how virtual pages as assigned to physical memory

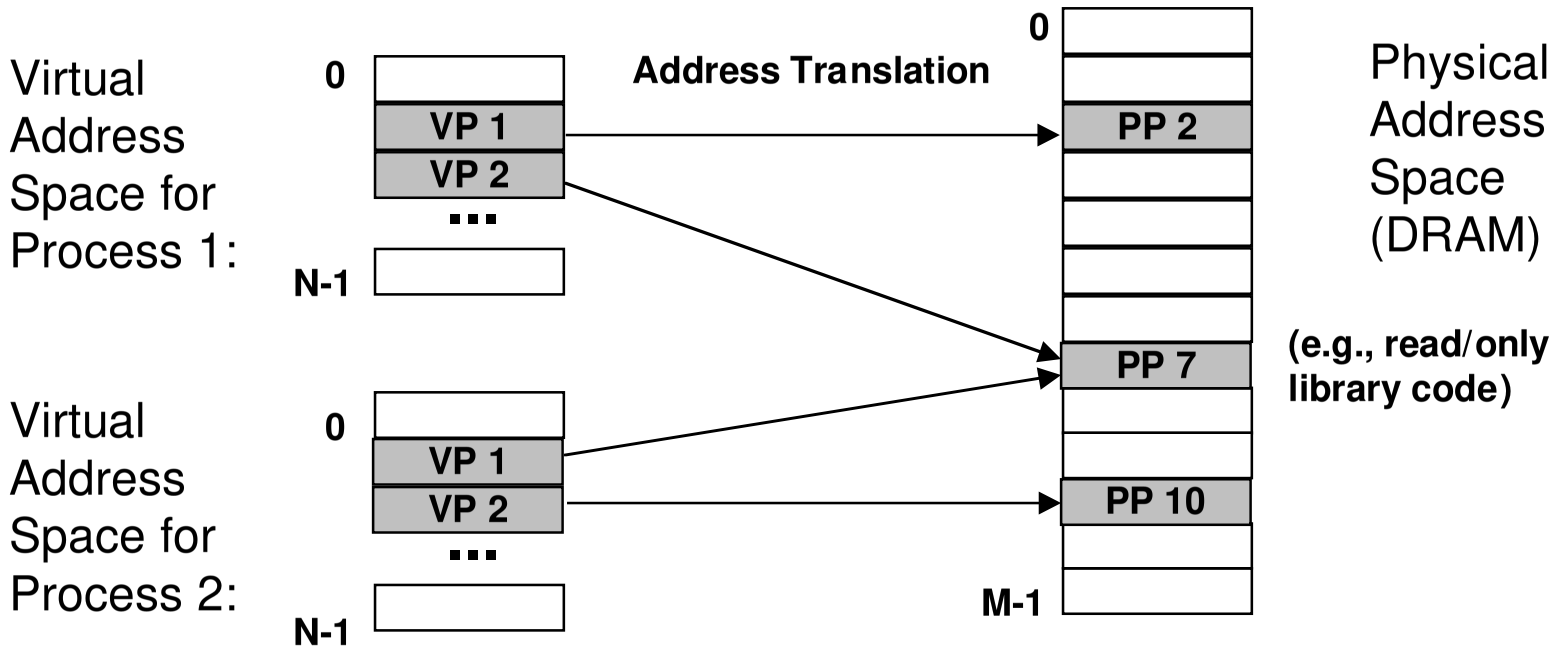

Contrast: Macintosh Memory Model

MAC OS 1–9

- **Does not use traditional virtual memory**

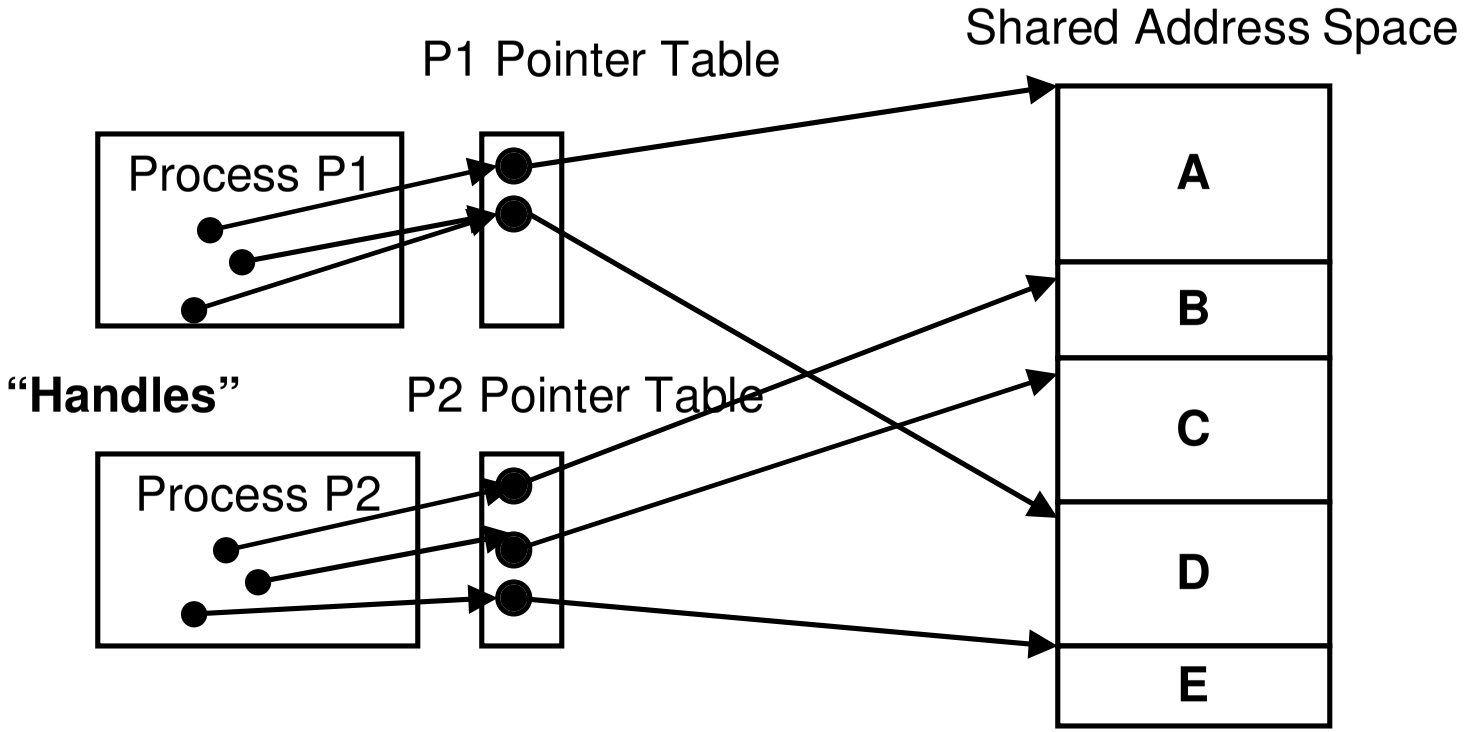

All program objects accessed through "handles"

- **Indirect reference through pointer table**
- **Objects stored in shared global address space**

Macintosh Memory Management

Allocation / Deallocation

- **Similar to free-list management of malloc/free**

Compaction

- **Can move any object and just update the (unique) pointer in pointer table**

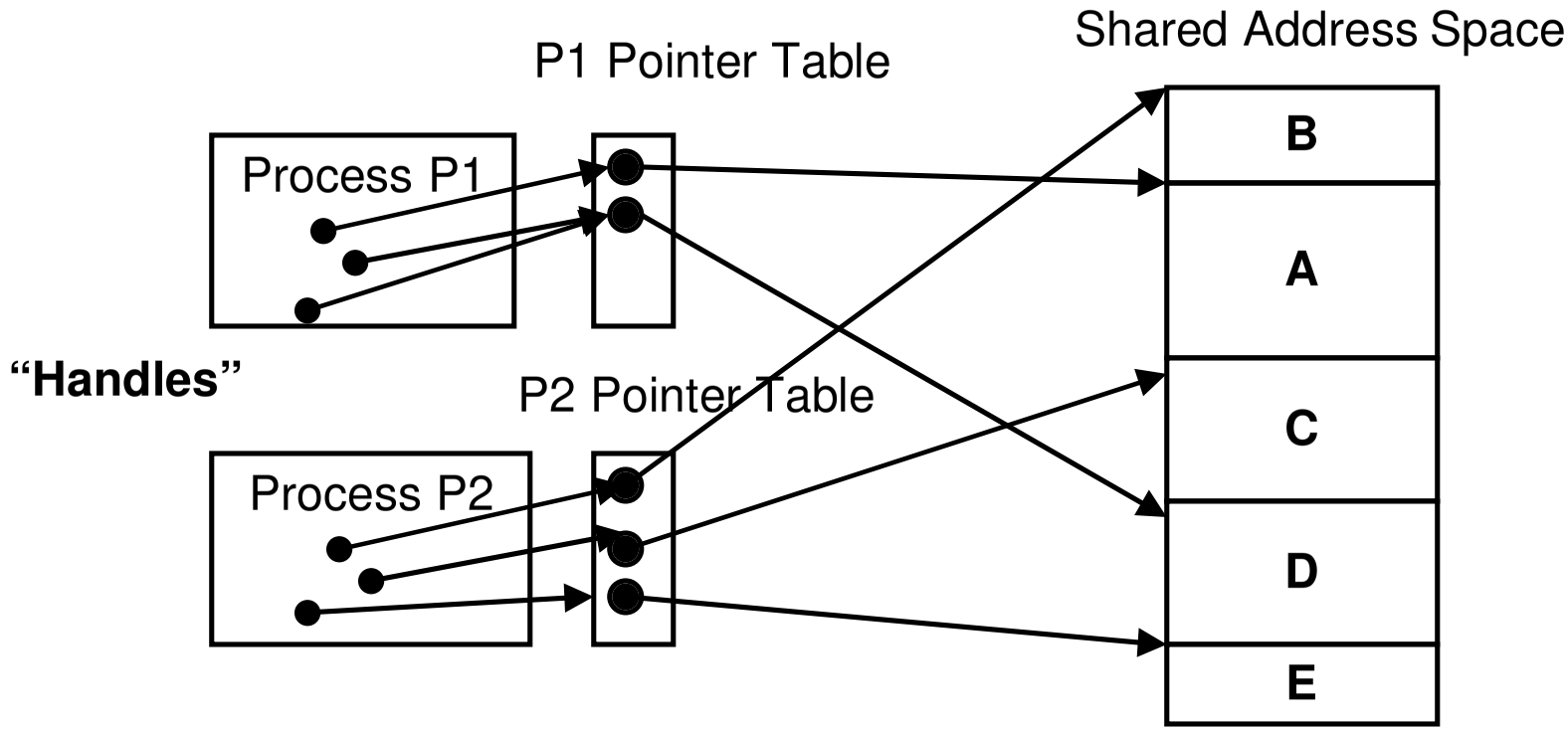

Mac vs. VM-Based Memory Mgmt

Allocating, deallocating, and moving memory:

- **can be accomplished by both techniques**

Block sizes:

- **Mac: variable-sized**
  - may be very small or very large
- **VM: fixed-size**
  - size is equal to *one page* (4KB on x86 Linux systems)

Allocating contiguous chunks of memory:

- **Mac: contiguous allocation is *required***
- **VM: can map contiguous range of virtual addresses to disjoint ranges of physical addresses**

Protection

- **Mac: "wild write" by one process can corrupt another's data**

MAC OS X

"Modern" Operating System

- **Virtual memory with protection**
- **Preemptive multitasking**
  - Other versions of MAC OS require processes to voluntarily relinquish control

Based on MACH OS

- **Developed at CMU in late 1980's**

Motivation #3: Protection

Page table entry contains access rights information

- hardware enforces this protection (trap into OS if violation occurs)

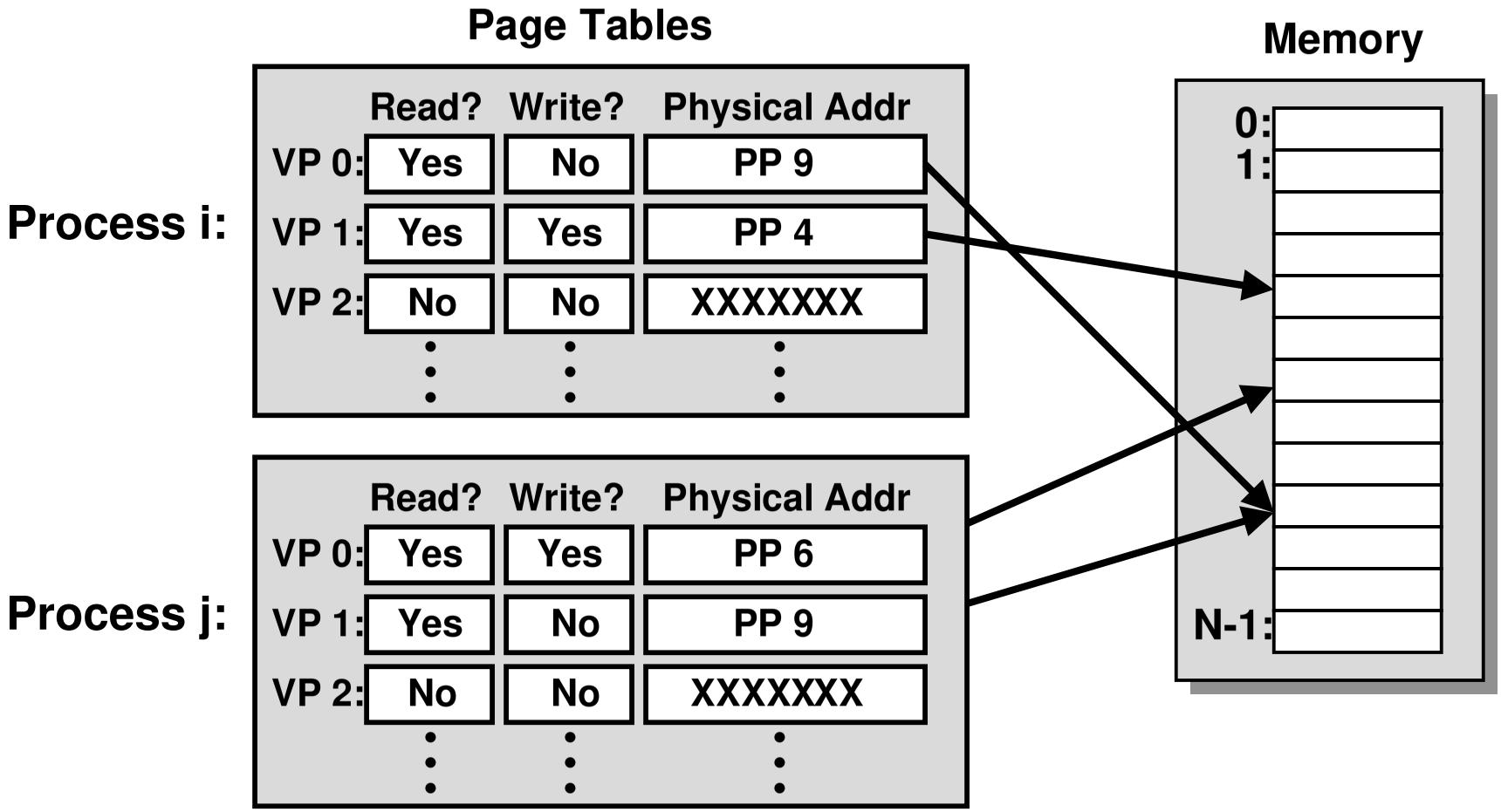

VM Address Translation

V = {0, 1, . . . , N–1} virtual address space
P = {0, 1, . . . , M–1} physical address space

N > M

MAP: V → P U {∅} address mapping function

MAP(a) = a' if data at virtual address a is present at physical address a' in P
= ∅ if data at virtual address a is not present in P

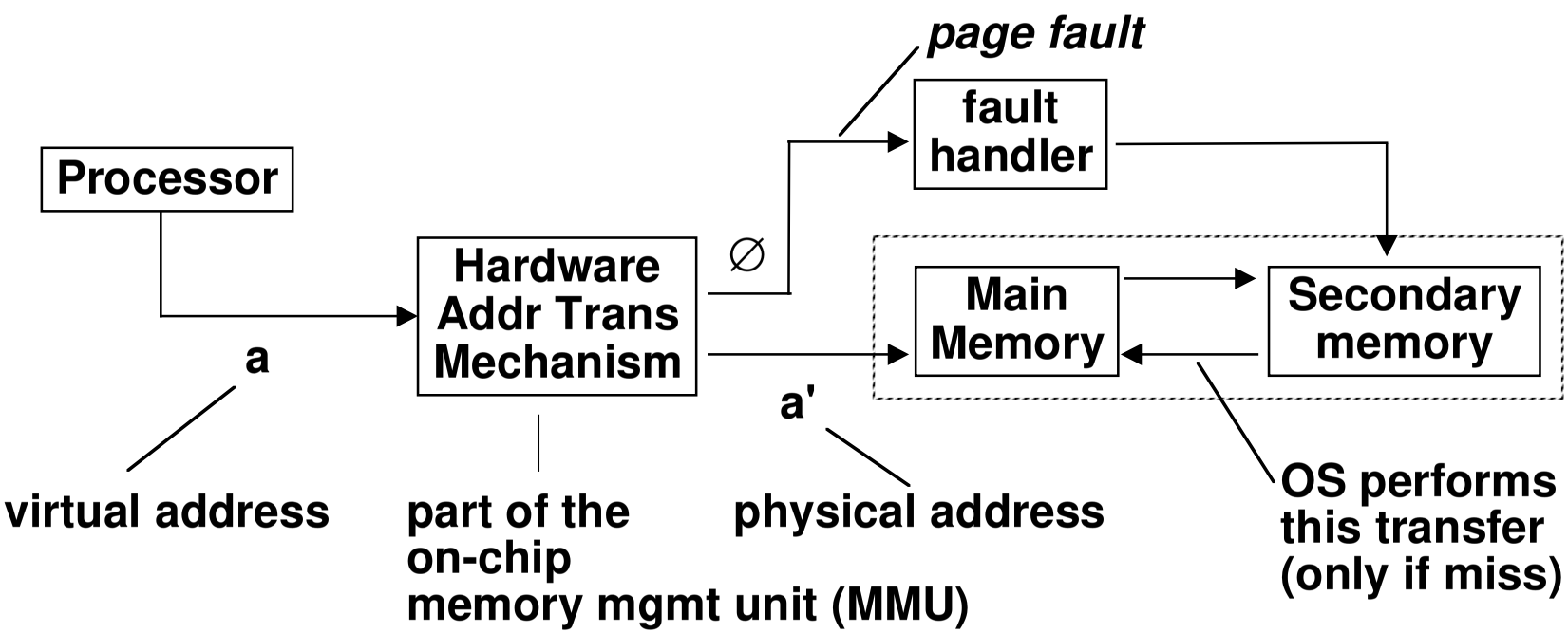

VM Address Translation

Parameters

- **$P = 2^p$ = page size (bytes).**
- **$N = 2^n$ = Virtual address limit**
- **$M = 2^m$ = Physical address limit**

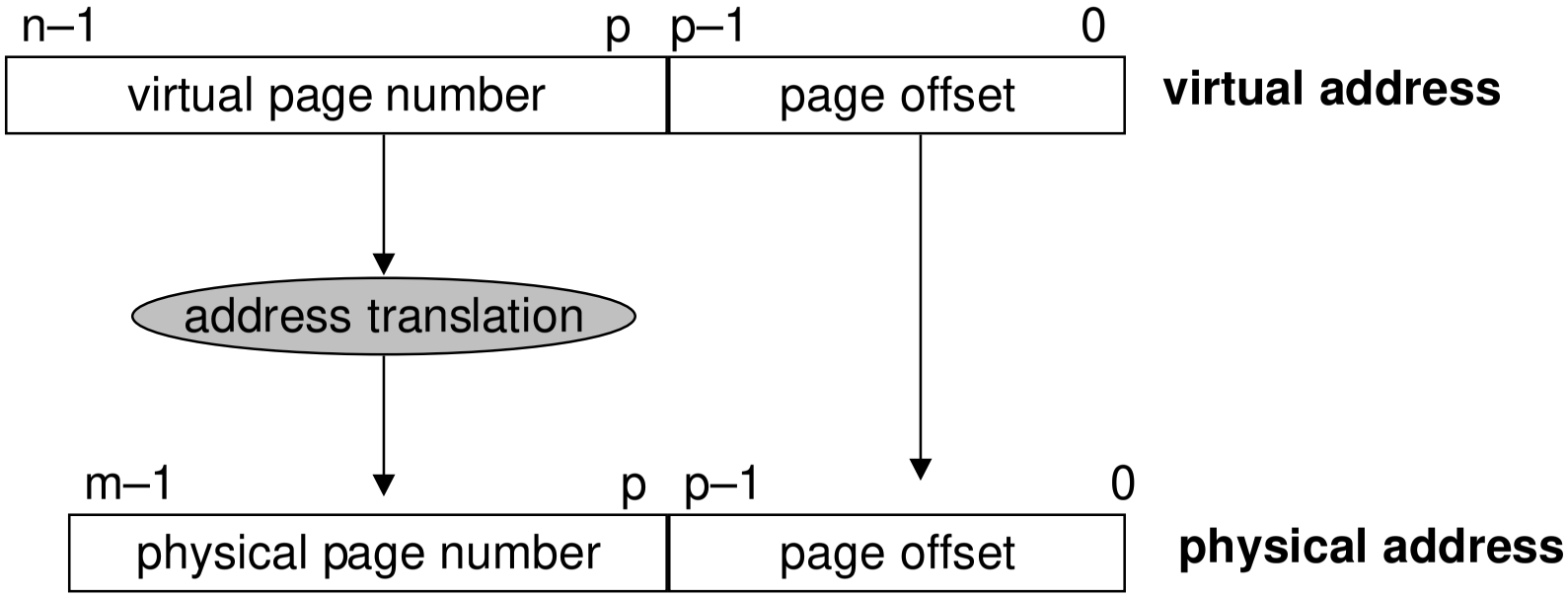

Notice that the page offset bits don't change as a result of translation

Page Tables

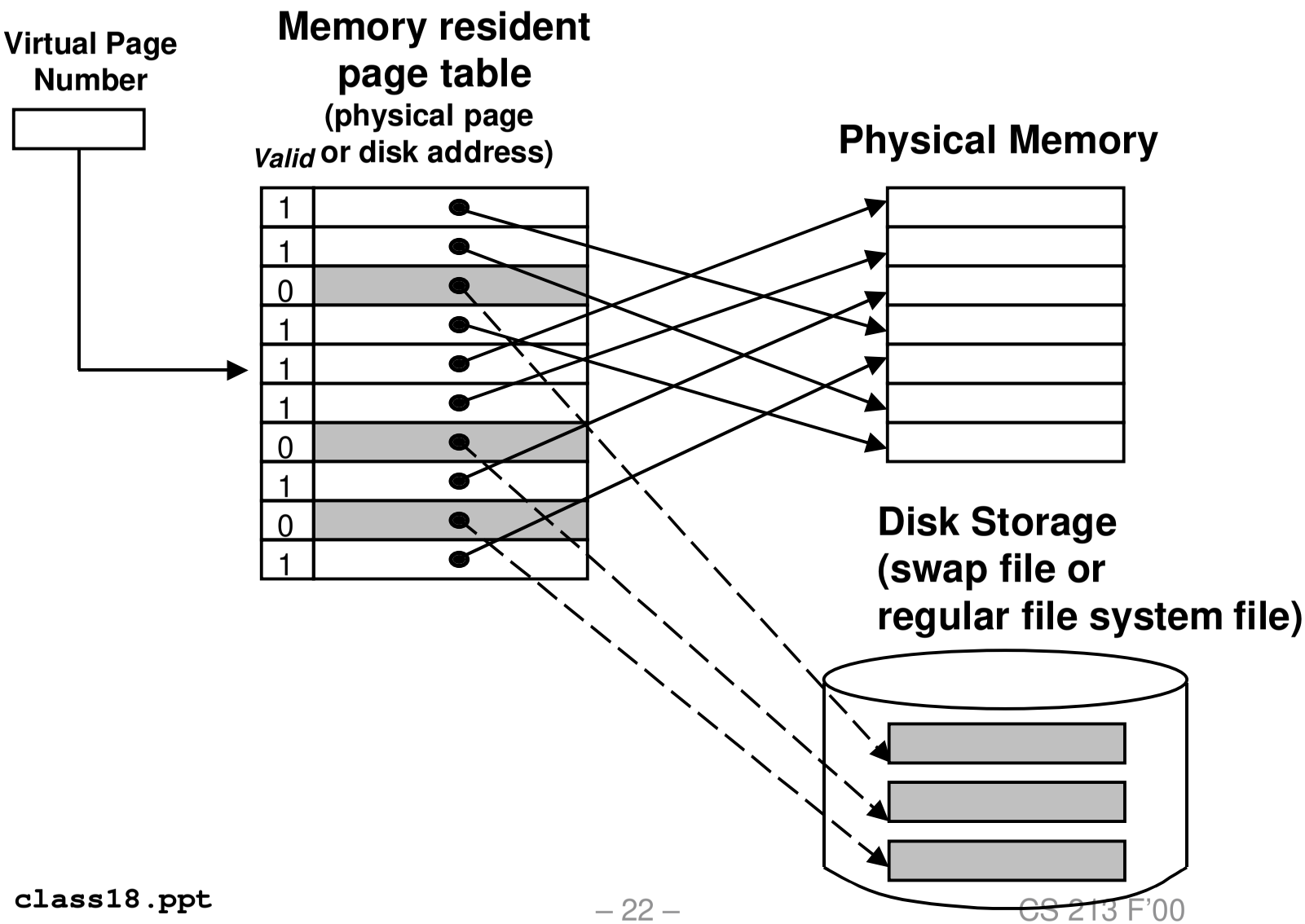
Virtual Page Number
Memory resident page table
(physical page or disk address)
Valid
1
1
0
1
1
1
0
1
0
1
Physical Memory
Disk Storage (swap file or regular file system file)

Address Translation via Page Table

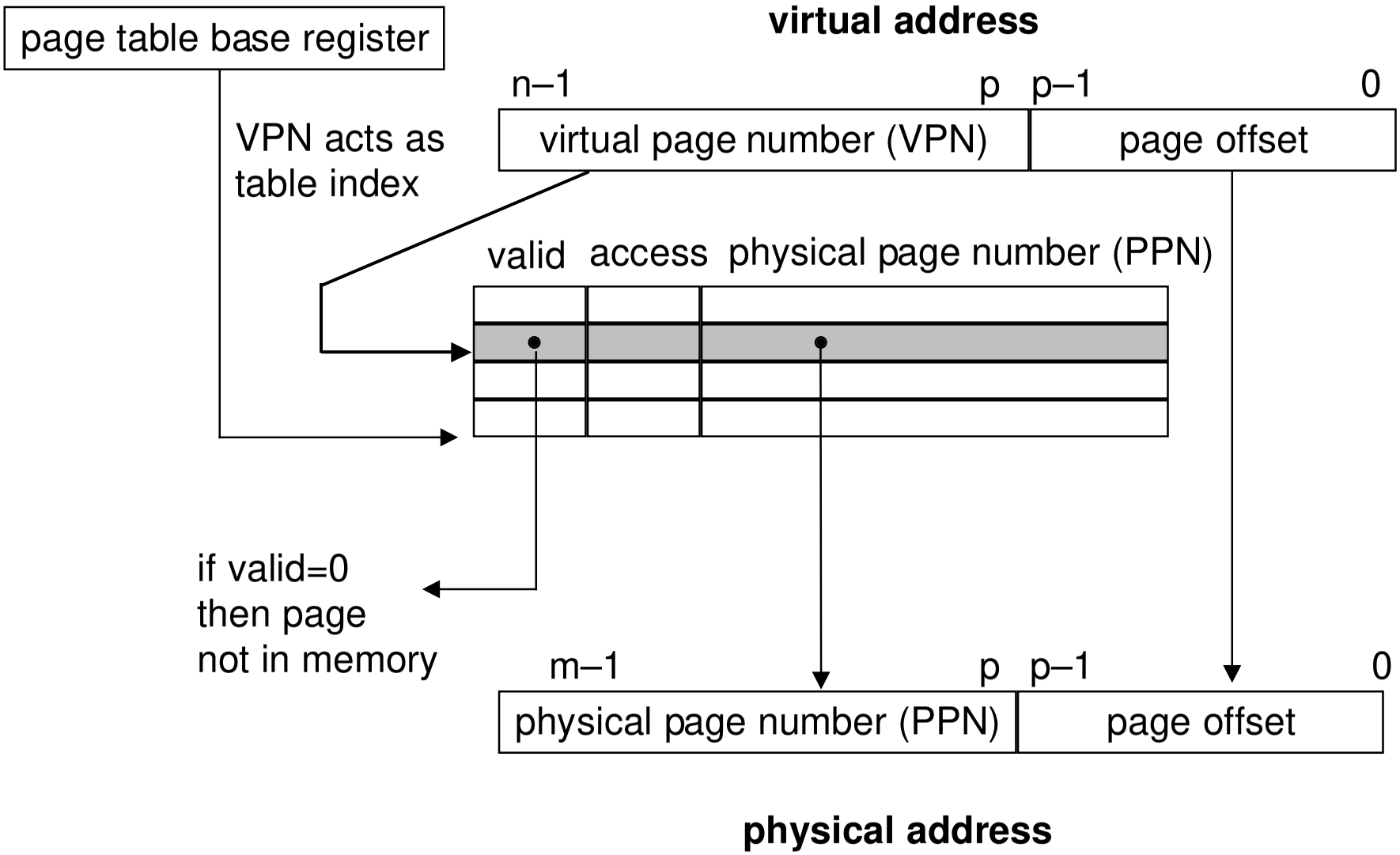

Page Table Operation

Translation

- **Separate (set of) page table(s) per process**
- **VPN forms index into page table (points to a page table entry)**

Computing Physical Address

- **Page Table Entry (PTE) provides information about page**
  - if (valid bit = 1) then the page is in memory.
    - » Use physical page number (PPN) to construct address
  - if (valid bit = 0) then the page is on disk
    - » Page fault
    - » Must load page from disk into main memory before continuing

Checking Protection

- **Access rights field indicate allowable access**
  - e.g., read-only, read-write, execute-only
  - typically support multiple protection modes (e.g., kernel vs. user)
- **Protection violation fault if user doesn't have necessary permission**

Integrating VM and Cache

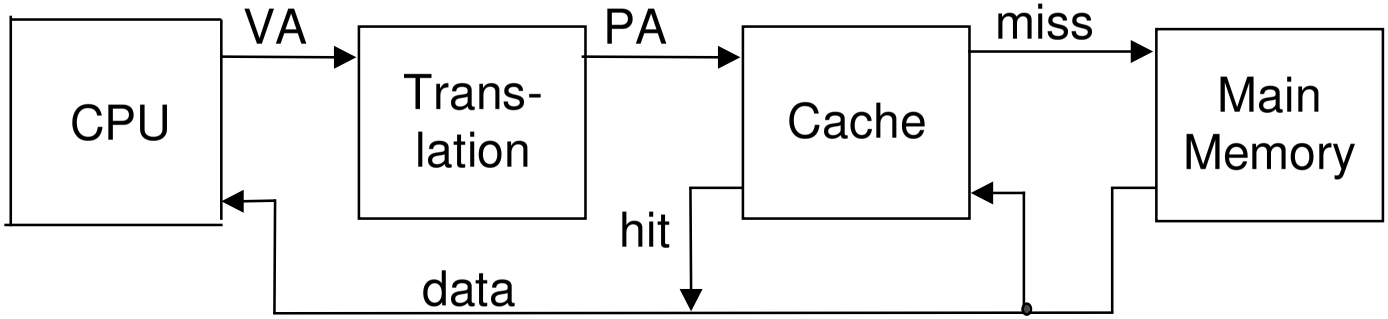

Most Caches "Physically Addressed"

- **Accessed by physical addresses**
- **Allows multiple processes to have blocks in cache at same time**
- **Allows multiple processes to share pages**
- **Cache doesn't need to be concerned with protection issues**
  - Access rights checked as part of address translation

Perform Address Translation Before Cache Lookup

- **But this could involve a memory access itself (of the PTE)**
- **Of course, page table entries can also become cached**

Speeding up Translation with a TLB

"Translation Lookaside Buffer" (TLB)

- **Small hardware cache in MMU**
- **Maps virtual page numbers to physical page numbers**
- **Contains complete page table entries for small number of pages**

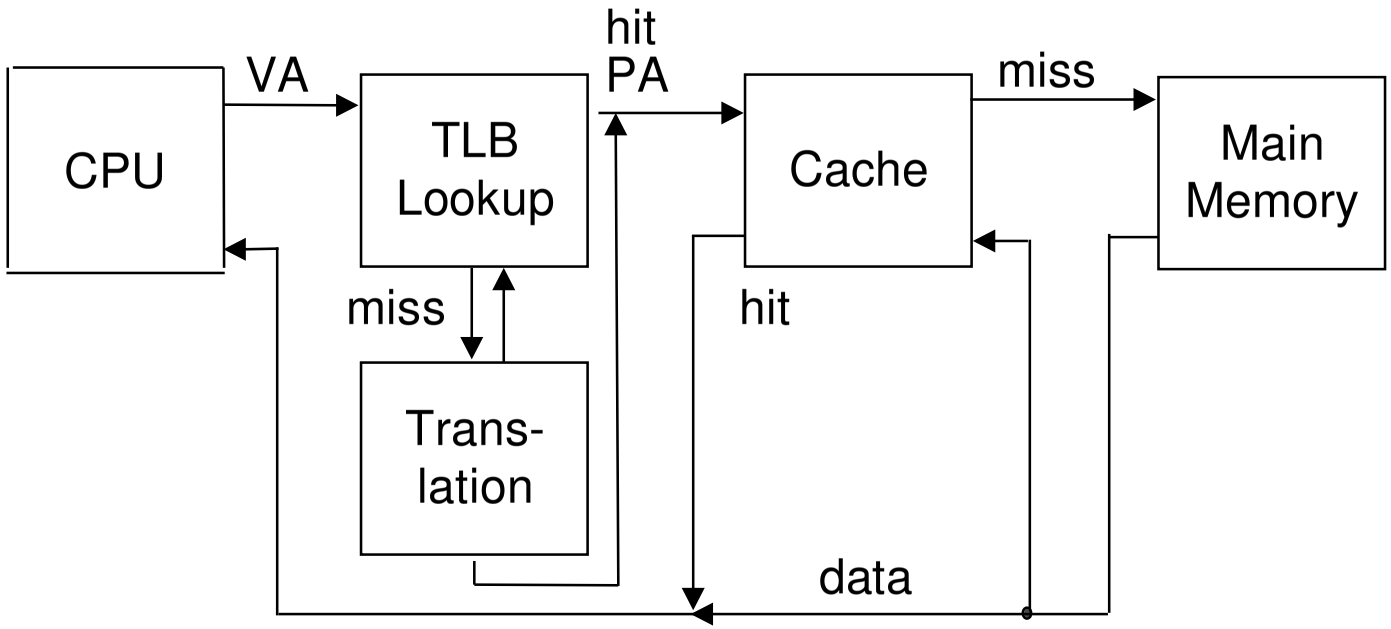

Address Translation with a TLB

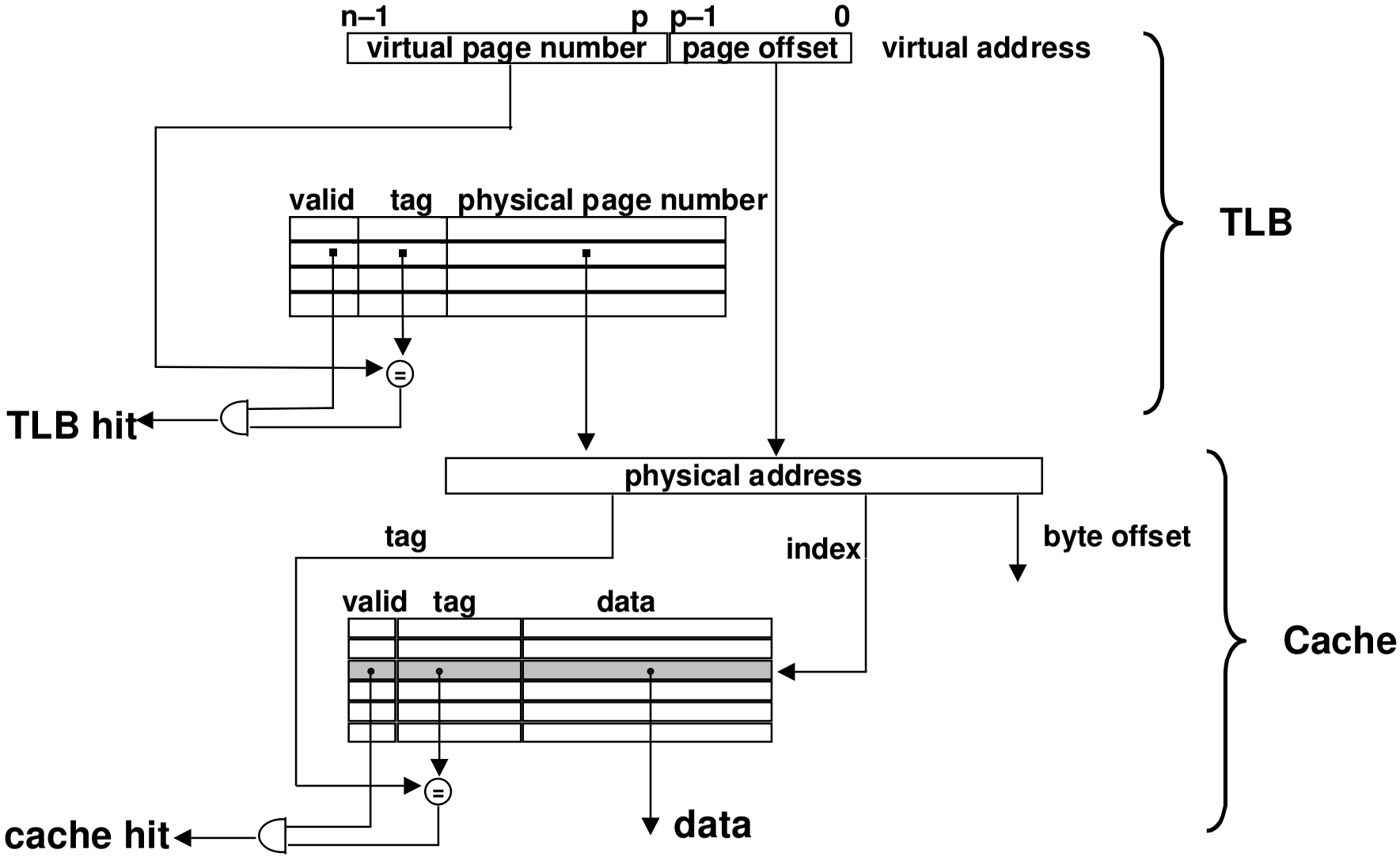

Simple Memory System Example

Addressing

- 14-bit virtual addresses
- 12-bit physical address
- Page size = 64 bits

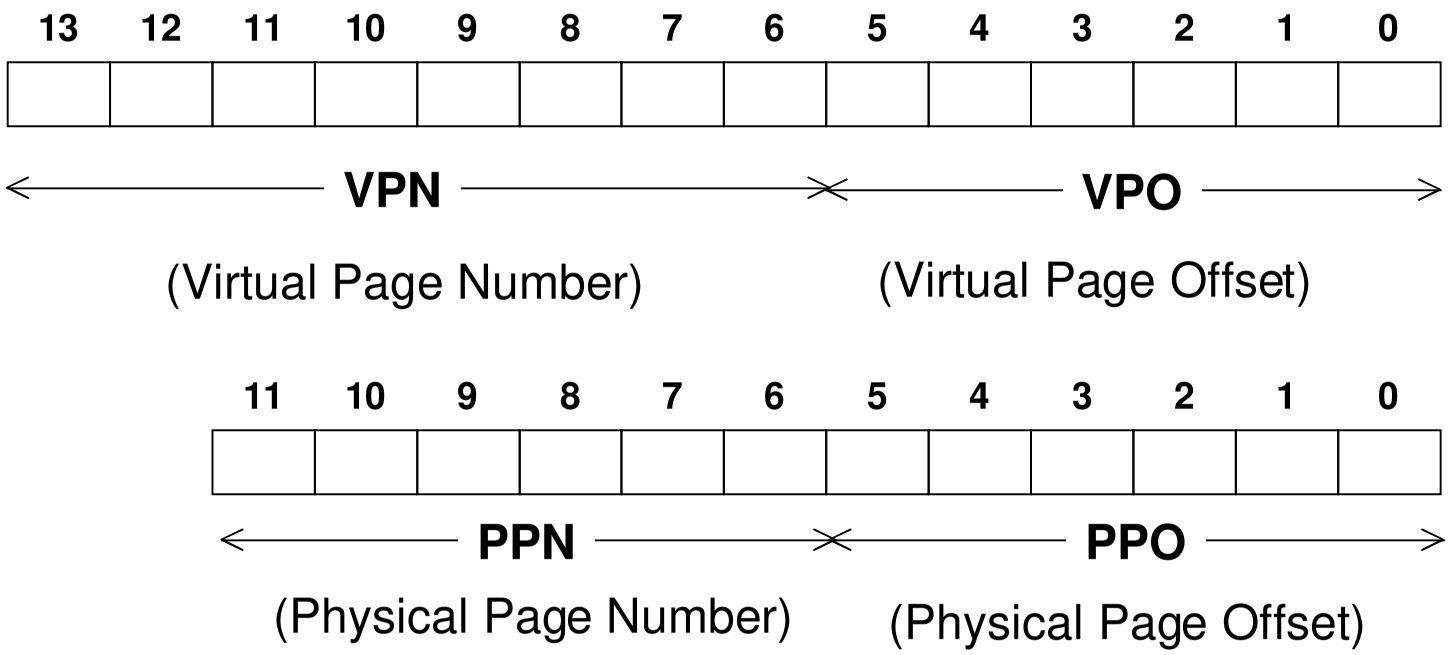

Simple Memory System Page Table

- **Only show first 16 entries**

VPN	PPN	Valid	VPN	PPN	Valid
00	28	1	08	13	1
01	–	0	09	17	1
02	33	1	0A	09	1
03	02	1	0B	–	0
04	–	0	0C	–	0
05	16	1	0D	2D	1
06	–	0	0E	11	1
07	–	0	0F	0D	1

Simple Memory System TLB

TLB

- 16 entries
- 4-way associative

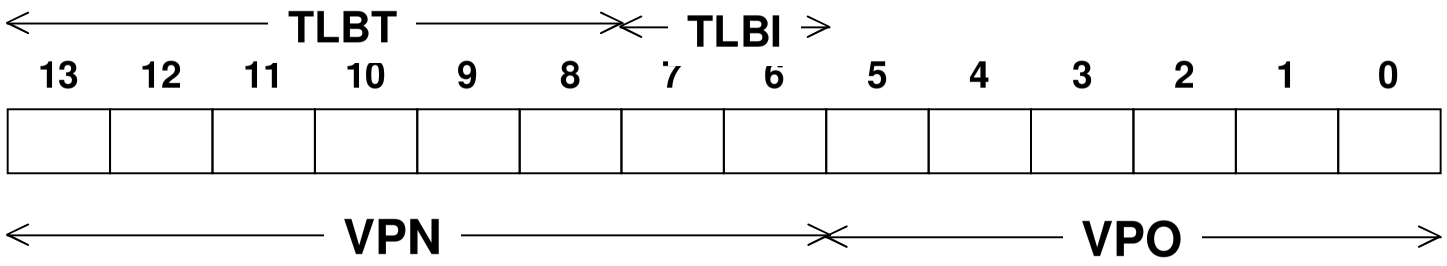

Set	Tag	PPN	Valid	Tag	PPN	Valid	Tag	PPN	Valid	Tag	PPN	Valid
0	03	–	0	09	0D	1	00	–	0	07	02	1
1	03	2D	1	02	–	0	04	–	0	0A	–	0
2	02	–	0	08	–	0	06	–	0	03	–	0
3	07	–	0	03	0D	1	0A	34	1	02	–	0

Simple Memory System Cache

Cache

- 16 lines
- 4-byte line size
- Direct mapped

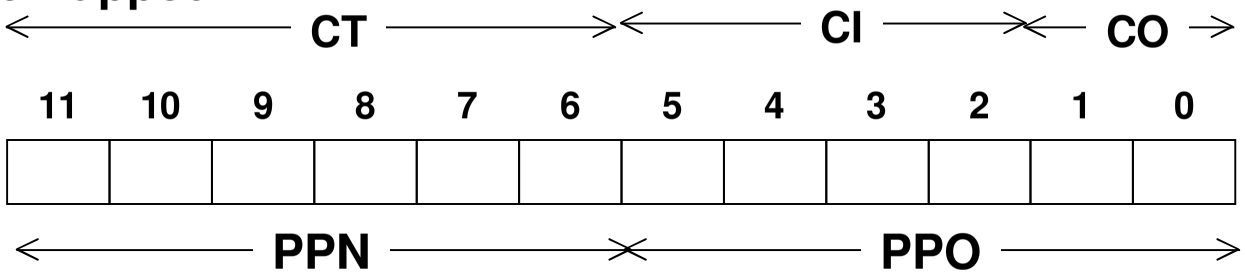

Idx	Tag	Valid	B0	B1	B2	B3	Idx	Tag	Valid	B0	B1	B2	B3
0	19	1	99	11	23	11	8	24	1	3A	00	51	89
1	15	0	–	–	–	–	9	2D	0	–	–	–	–
2	1B	1	00	02	04	08	A	2D	1	93	15	DA	3B
3	36	0	–	–	–	–	B	0B	0	–	–	–	–
4	32	1	43	6D	8F	09	C	12	0	–	–	–	–
5	0D	1	36	72	F0	1D	D	16	1	04	96	34	15
6	31	0	–	–	–	–	E	13	1	83	77	1B	D3
7	16	1	11	C2	DF	03	F	14	0	–	–	–	–

Address Translation Example #1

Virtual Address `0x03D4`

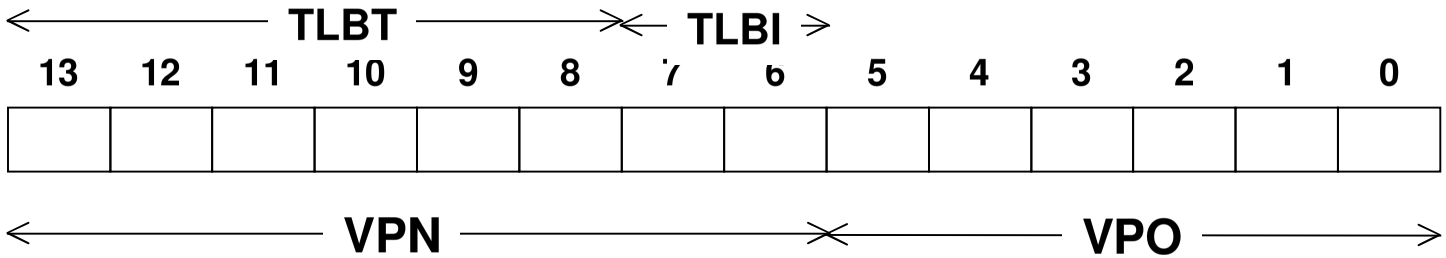

VPN ___ TLBI ___ TLBT ____ TLB Hit? __ Page Fault? __ PPN: ____

Physical Address

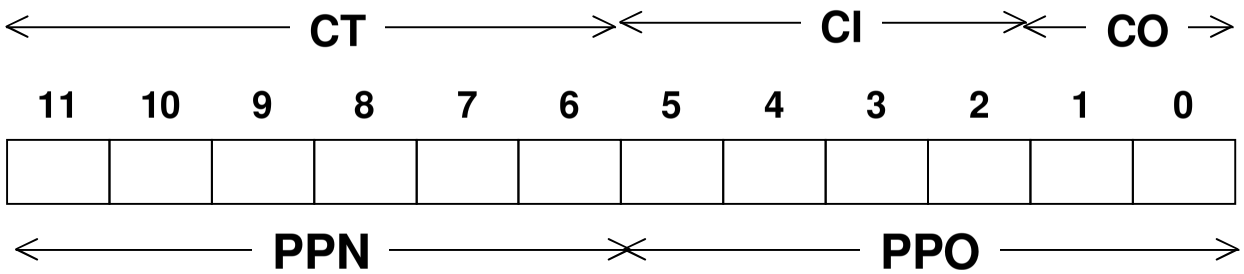

Offset ___ CI___ CT ____ Hit? __ Byte: ____

Address Translation Example #2

Virtual Address `0x027C`

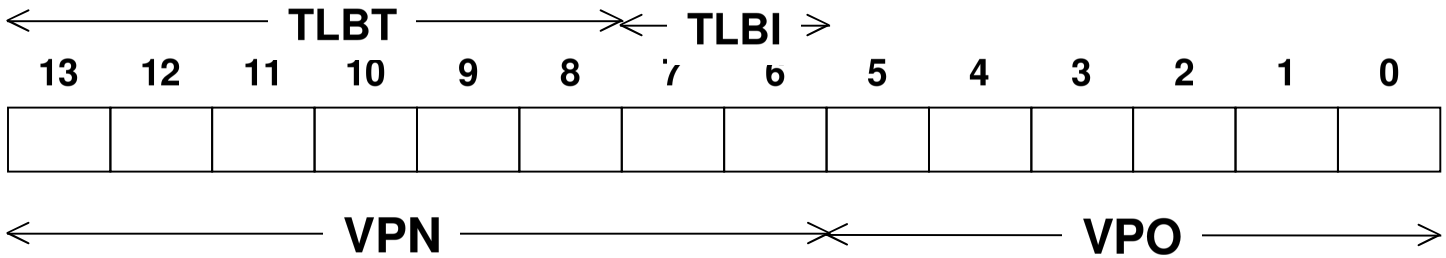

VPN ___ TLBI ___ TLBT ____ TLB Hit? __ Page Fault? __ PPN: ____

Physical Address

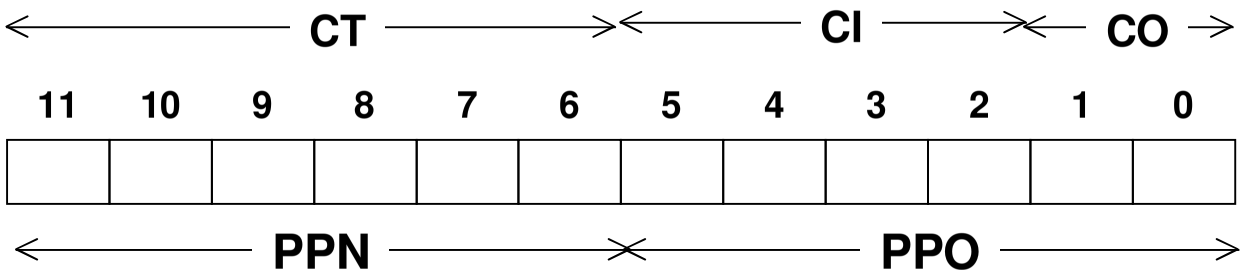

Offset ___ CI___ CT ____ Hit? __ Byte: ____

Address Translation Example #3

Virtual Address `0x0040`

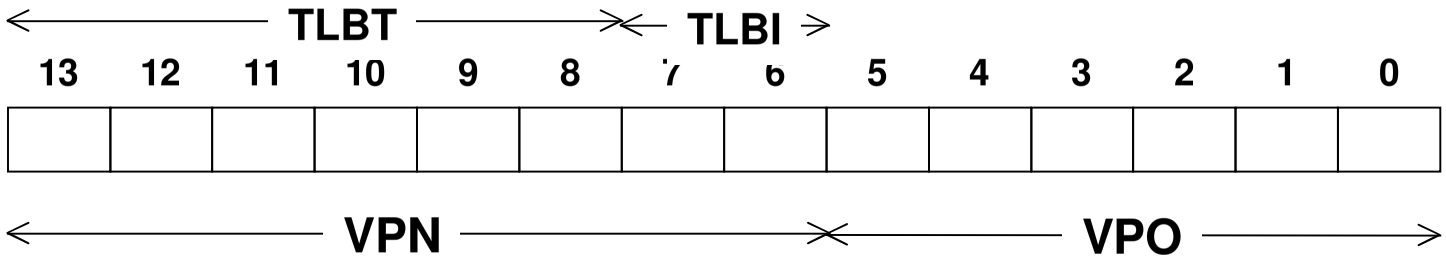

VPN ___ TLBI ___ TLBT ____ TLB Hit? __ Page Fault? __ PPN: ____

Physical Address

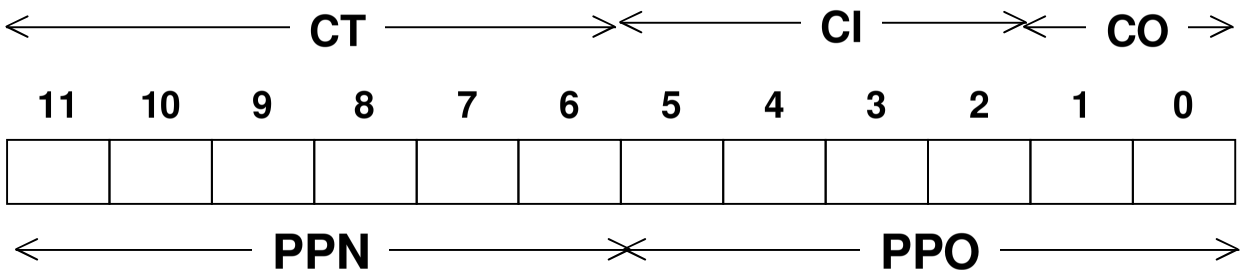

Offset ___ CI___ CT ____ Hit? __ Byte: ____

Multi-Level Page Tables

Given:

- **4KB (2^{12}) page size**
- **32-bit address space**
- **4-byte PTE**

Problem:

- **Would need a 4 MB page table!**
  - 2^{20} *4 bytes

Common solution

- **multi-level page tables**
- **e.g., 2-level table (P6)**
  - Level 1 table: 1024 entries, each of which points to a Level 2 page table.
  - Level 2 table: 1024 entries, each of which points to a page

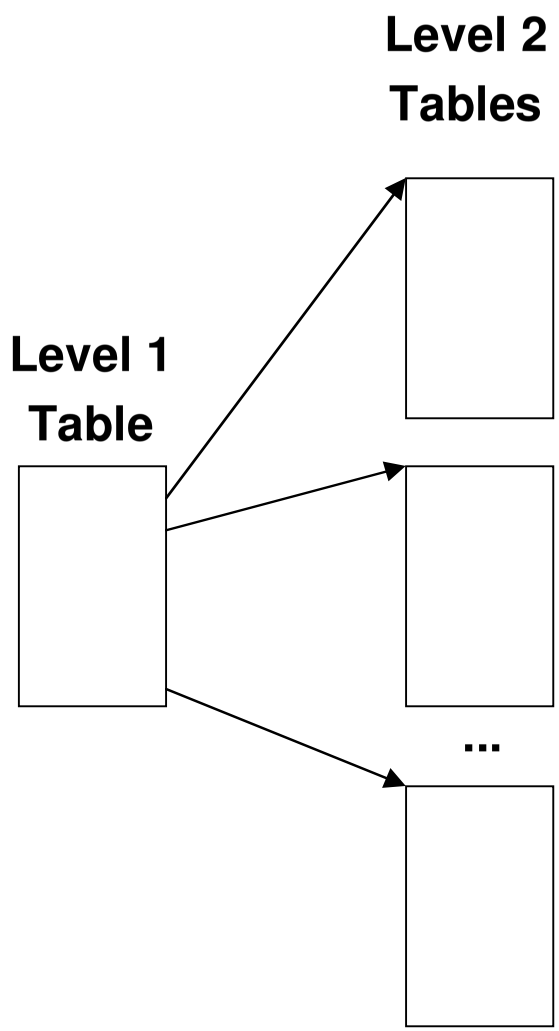

Main Themes

Programmer's View

- **Large "flat" address space**
  - Can allocate large blocks of contiguous addresses
- **Processor "owns" machine**
  - Has private address space
  - Unaffected by behavior of other processes

System View

- **User virtual address space created by mapping to set of pages**
  - Need not be contiguous
  - Allocated dynamically
  - Enforce protection during address translation
- **OS manages many processes simultaneously**
  - Continually switching among processes
  - Especially when one must wait for resource
    - » E.g., disk I/O to handle page fault