15-213

Memory Technology
March 15, 2001

Topics

- Memory Hierarchy Basics
- Static RAM
- Dynamic RAM
- Magnetic Disks
- Access Time Gap

Impact of Technology

Moore's Law

- **Observation by Gordon Moore, Intel founder, in 1971**
- **Transistors / Chip doubles every 18 months**
  - Has expanded to include processor speed, disk capacity, …

We Owe a Lot to the Technologists

- **Computer science has ridden the wave**

Things Aren't Over Yet

- **Technology will continue to progress along current growth curves**
- **For at least 7–10 more years**
- **Difficult technical challenges in doing so**

Even Technologists Can't Beat Laws of Physics

- **Quantum effects create fundamental limits as approach atomic scale**
- **Opportunities for new devices**

Impact of Moore's Law

Moore's Law

- **Performance factors of systems built with integrated circuit technology follow exponential curve**
- **E.g., computer speed / memory capacities double every 1.5 years**

Implications

- **Computers 10 years from now will run 100 X faster**
- **Problems that appear intractable today will be straightforward**
- **Must not limit future planning with today's technology**

Example Application Domains

- **Speech recognition**
  - Will be routinely done with handheld devices
- **Breaking secret codes**
  - Need to use large enough keys
- **Virtual Reality**
  - Complex interactive environments with real-time rendering

Computer System

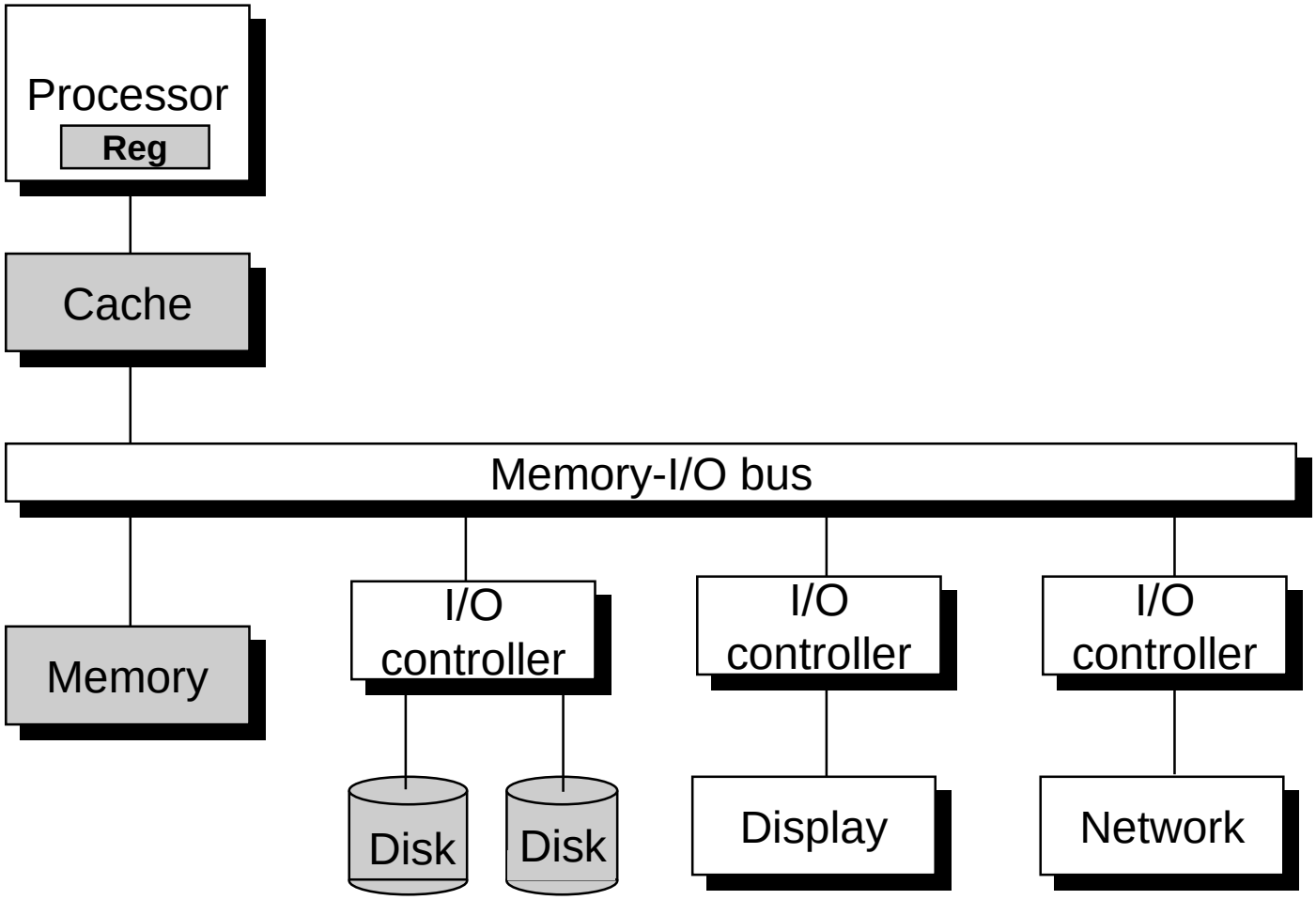

Levels in Memory Hierarchy

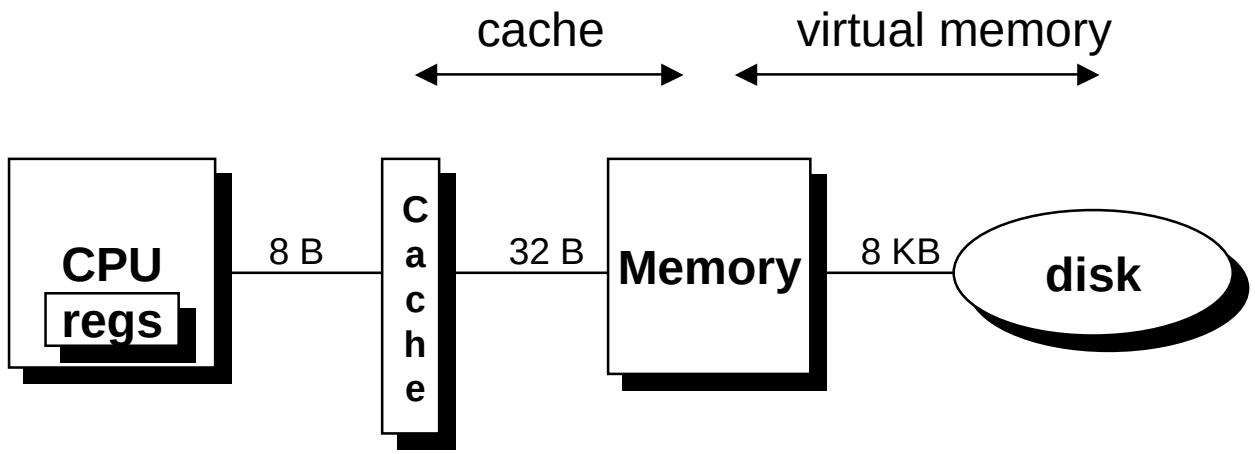

	Register	Cache	Memory	Disk Memory
size:	200 B	32KB - 4MB	128 MB	30 GB
speed:	2 ns	4 ns	60 ns	8 ms
$/Mbyte:		$100/MB	$1.00/MB	$0.05/MB
block size:	8 B	32 B	8 KB	

larger, slower, cheaper

Dimensions

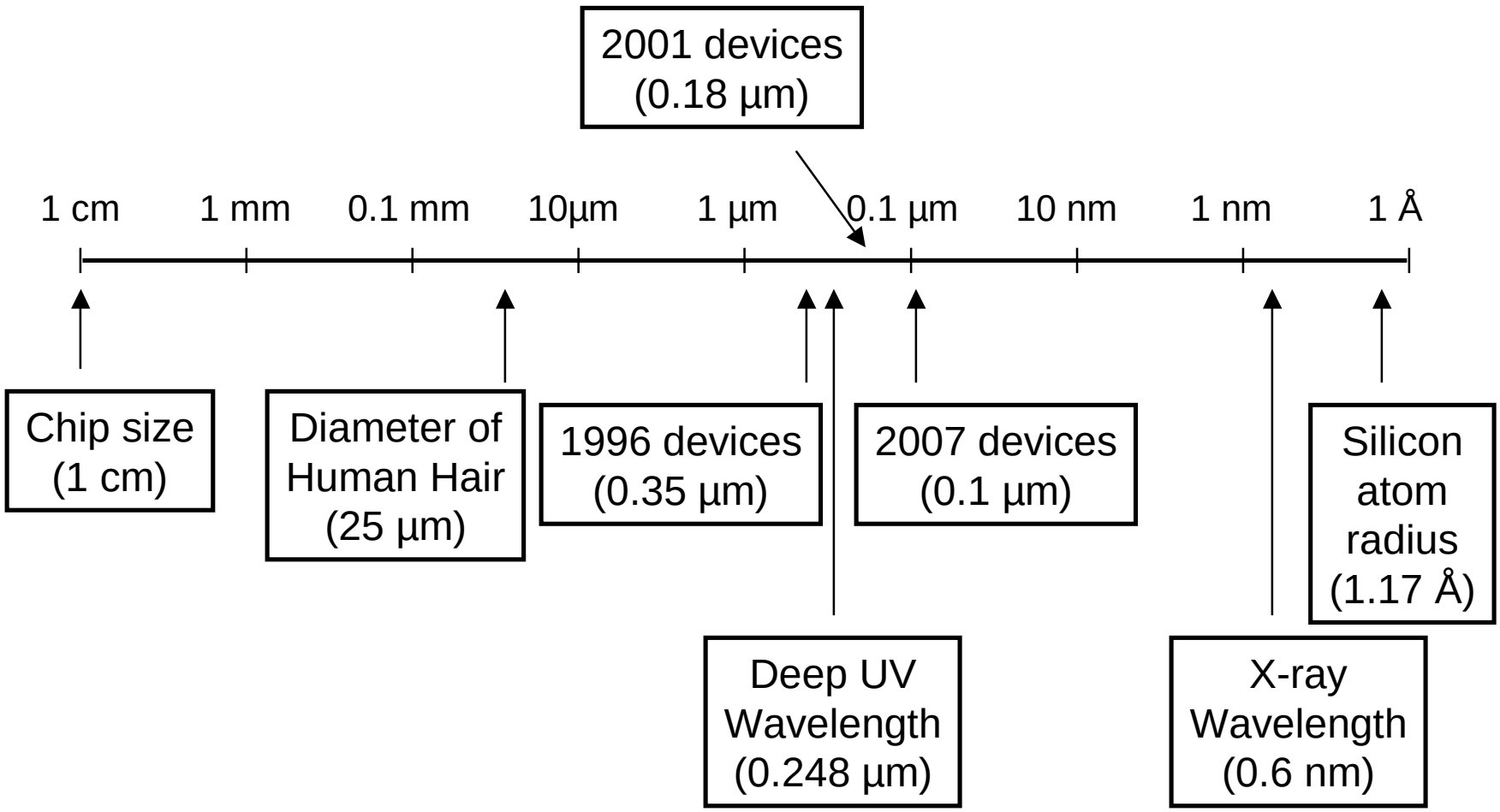
2001 devices
(0.18 µm)
1 cm
1 mm
0.1 mm
10µm
1 µm
0.1 µm
10 nm
1 nm
1 Å
Chip size
(1 cm)
Diameter of
Human Hair
(25 µm)
1996 devices
(0.35 µm)
2007 devices
(0.1 µm)
Silicon
atom
radius
(1.17 Å)
Deep UV
Wavelength
(0.248 µm)
X-ray
Wavelength
(0.6 nm)

Scaling to 0.1µm

- **Semiconductor Industry Association, 1992 Technology Workshop**
  - Projected future technology based on past trends

	1992	1995	1998	2001	2004	2007
Feature size (µm):	0.5	0.35	0.25	0.18	0.12	0.10
– *Industry is slightly ahead of projection*						
DRAM capacity:	16M	64M	256M	1G	4G	16G
– *Doubles every 1.5 years*						
– *Prediction on track*						
Chip area (cm^2):	2.5	4.0	6.0	8.0	10.0	12.5
– *Way off! Chips staying small*						

Static RAM (SRAM)

Fast

- ~4 nsec access time

Persistent

- as long as power is supplied
- no refresh required

Expensive

- ~$100/MByte
- 6 transistors/bit

Stable

- High immunity to noise and environmental disturbances

Technology for caches

Anatomy of an SRAM Cell

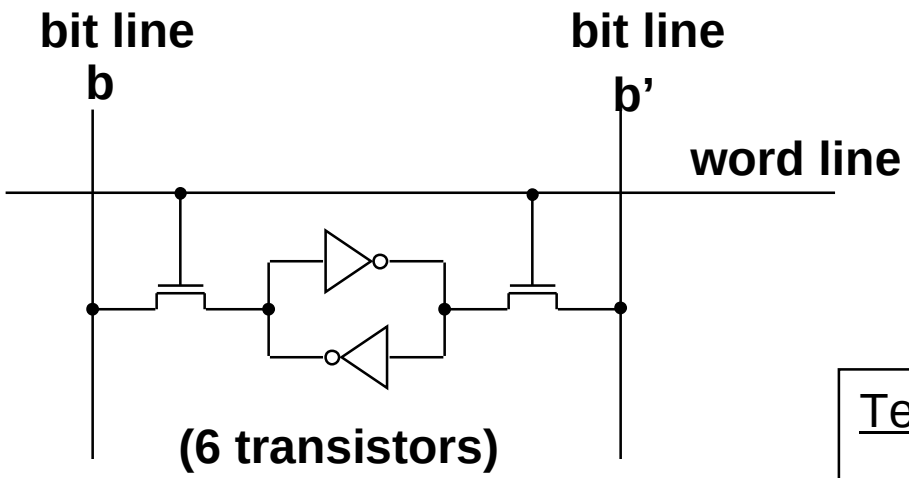

Stable Configurations

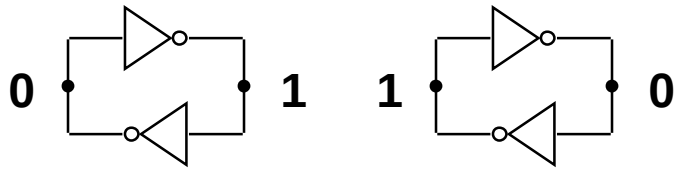

Terminology:

bit line: carries data

word line: used for addressing

Write:

1. set bit lines to new data value
   - **b'** is set to the opposite of **b**
2. raise word line to "high"

⇒ sets cell to new state (may involve flipping relative to old state)

Read:

1. set bit lines high
2. set word line high
3. see which bit line goes low

SRAM Cell Principle

Inverter Amplifies

- Negative gain
- Slope < –1 in middle
- Saturates at ends

Inverter Pair Amplifies

- Positive gain
- Slope > 1 in middle
- Saturates at ends

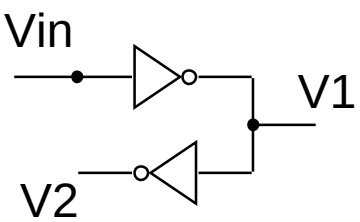

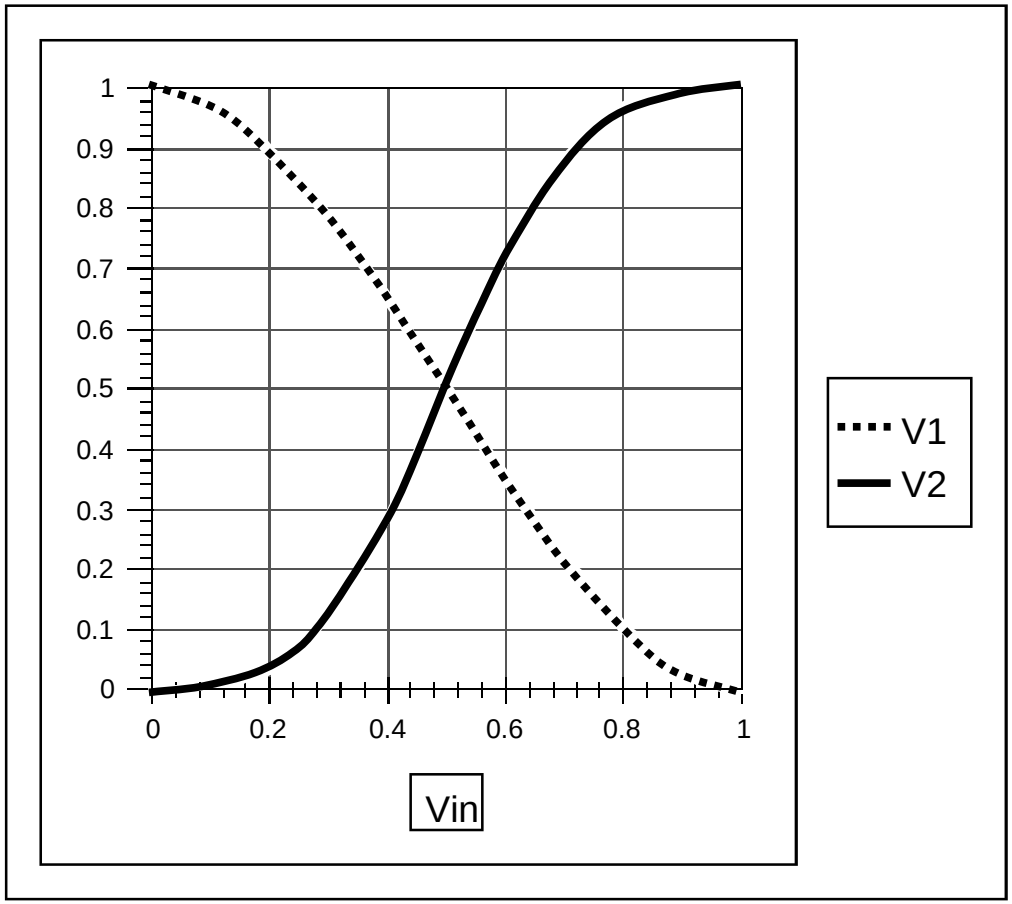

Bistable Element

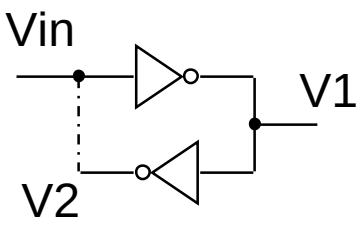

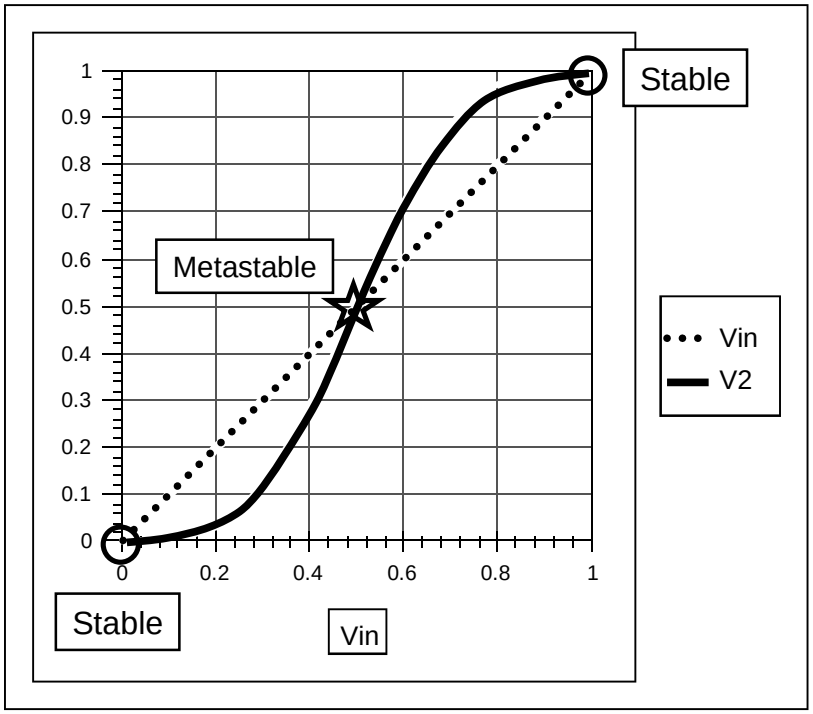

Stability

- **Require Vin = V2**
- **Stable at endpoints**
  - recover from pertubation
- **Metastable in middle**
  - Fall out when perturbed

Ball on Ramp Analogy

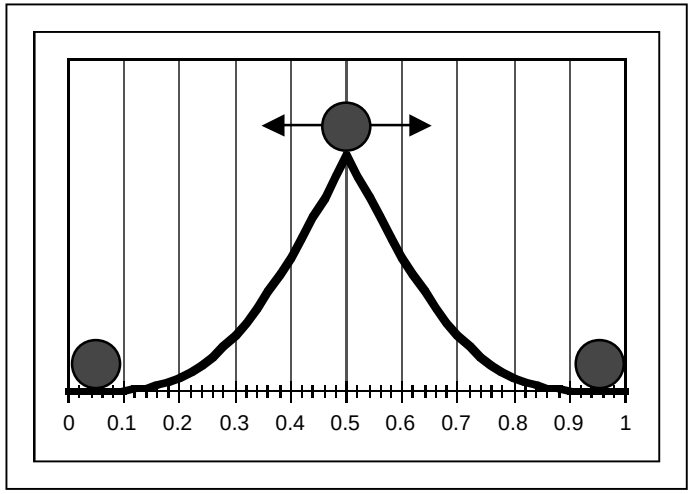

Example SRAM Configuration (16 x 8)

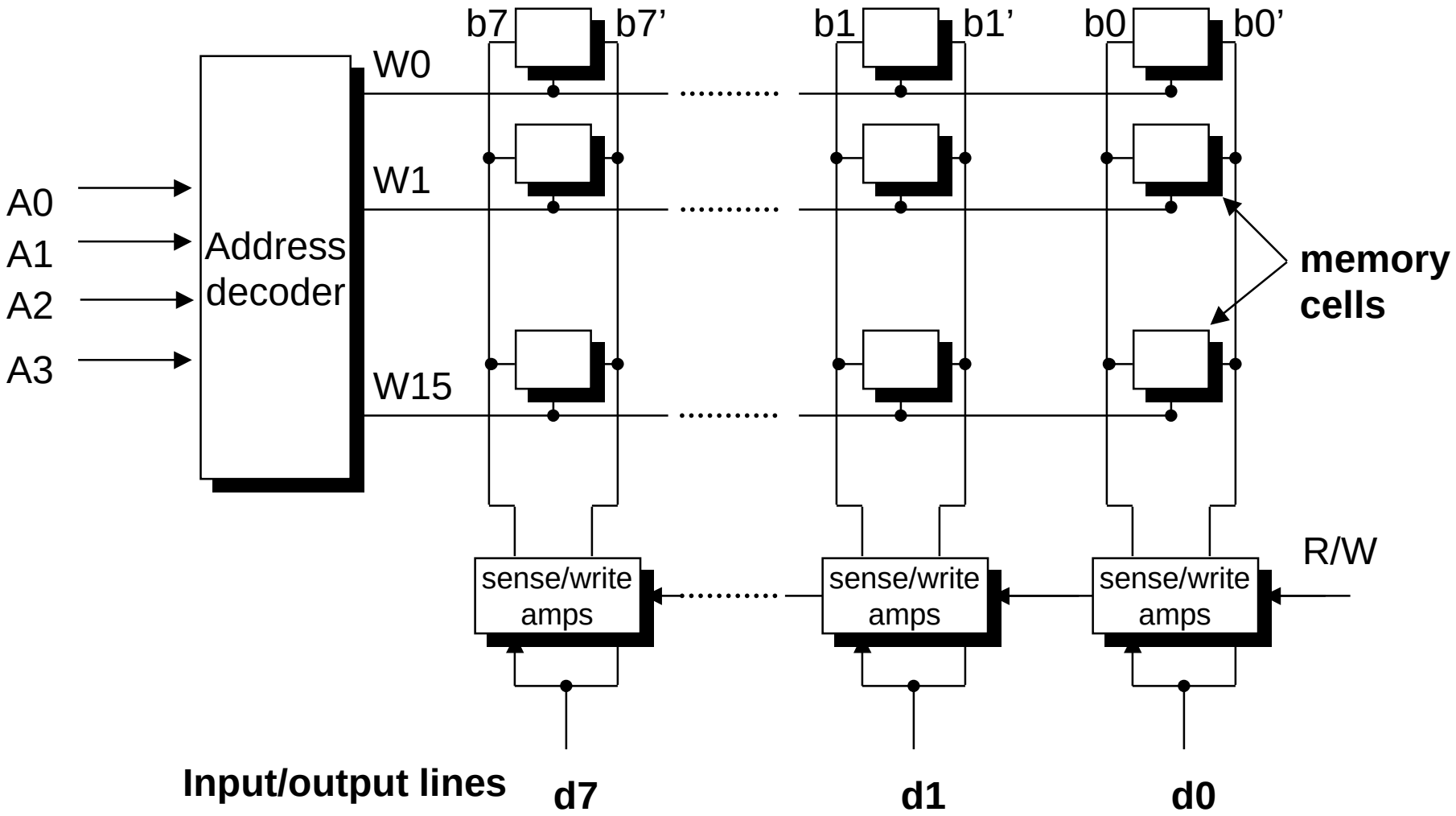

Dynamic RAM (DRAM)

Slower than SRAM

- access time ~60 nsec

Not persistent

- every row must be accessed every ~1 ms (refreshed)

Cheaper than SRAM

- ~$1.50 / MByte
- 1 transistor/bit

Fragile

- electrical noise, light, radiation

Workhorse memory technology

Anatomy of a DRAM Cell

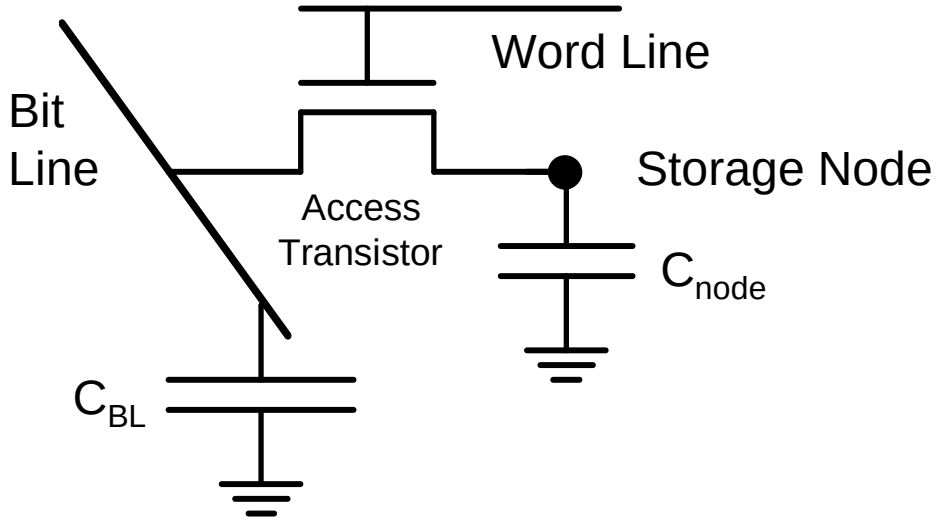

Writing

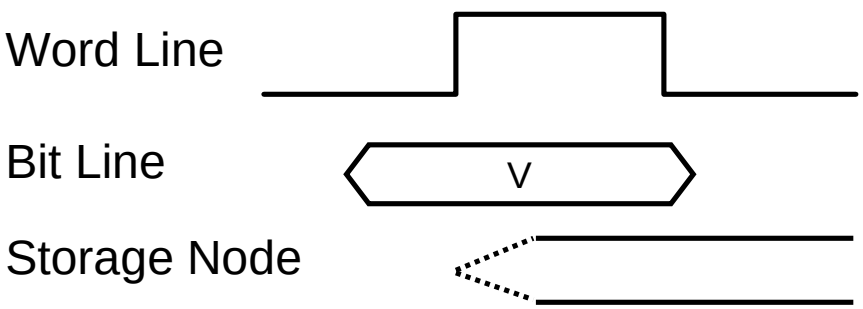

Reading

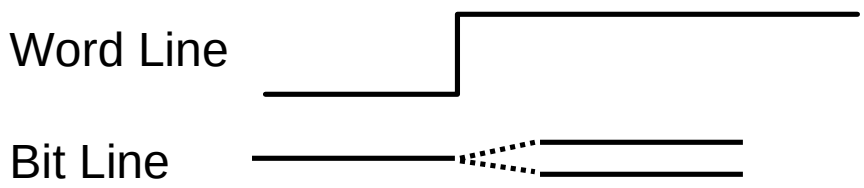

$\Delta V \sim C_{node} / C_{BL}$

Addressing Arrays with Bits

Array Size

- **R rows, R = 2^r**
- **C columns, C = 2^c**
- **N = R * C bits of memory**

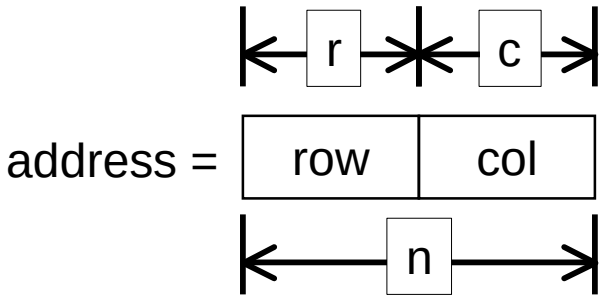

Addressing

- **Addresses are n bits, where N = 2^n**
- **row(address) = address / C**
  - leftmost r bits of address
- **col(address) = address % C**
  - rightmost bits of address

Example

- **R = 2**
- **C = 4**
- **address = 6**

	0	1	2	3
0	000	001	010	011
1	100	101	110	111

row 1

col 2

Example 2-Level Decode DRAM (64Kx1)

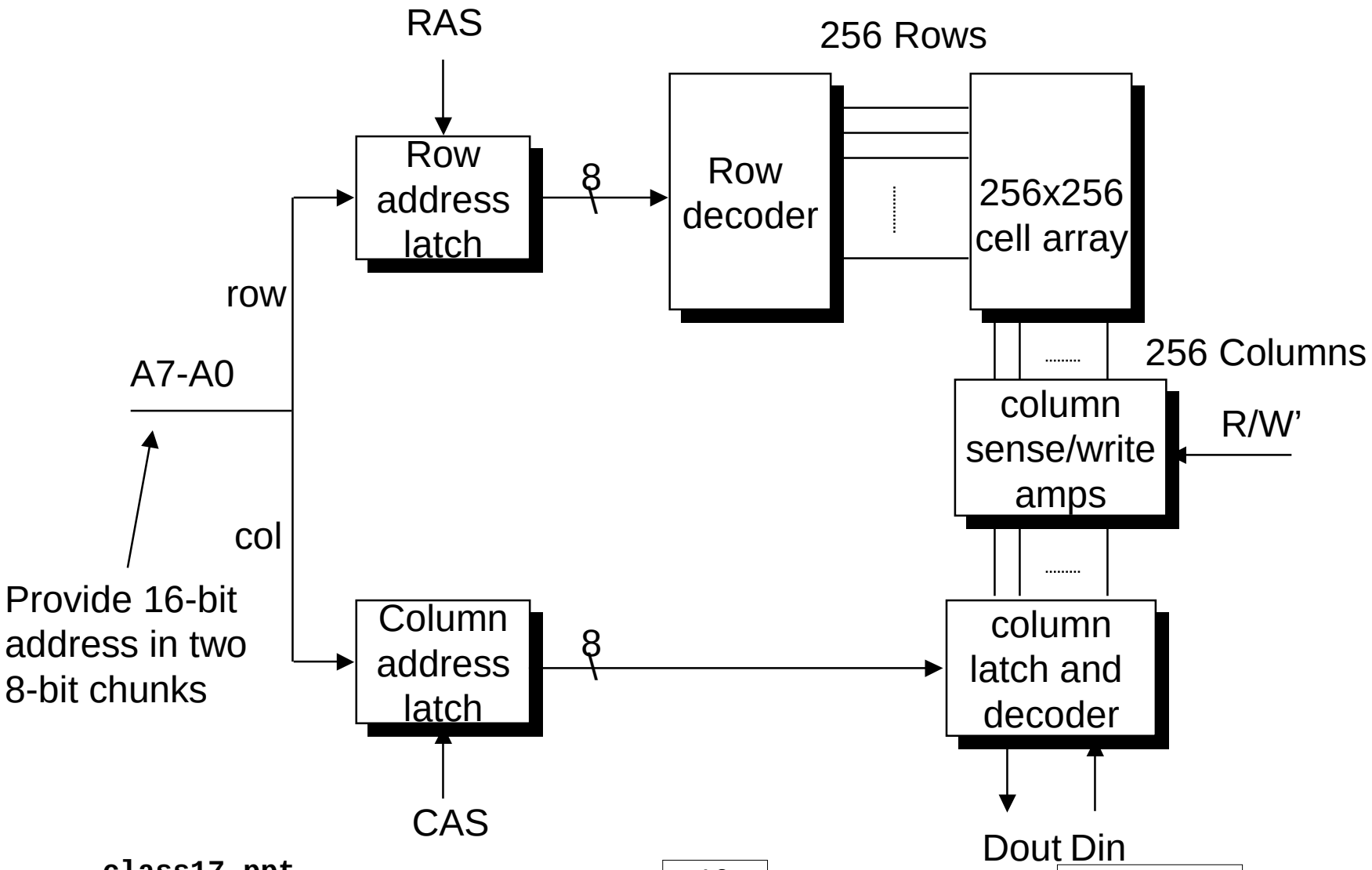

DRAM Operation

Row Address (~50ns)

- **Set Row address on address lines & strobe RAS**
- **Entire row read & stored in column latches**
- **Contents of row of memory cells destroyed**

Column Address (~10ns)

- **Set Column address on address lines & strobe CAS**
- **Access selected bit**
  - READ: transfer from selected column latch to Dout
  - WRITE: Set selected column latch to Din

Rewrite (~30ns)

- **Write back entire row**

Observations About DRAMs

Timing

- Access time (= 60ns) < cycle time (= 90ns)
- Need to rewrite row

Must Refresh Periodically

- Perform complete memory cycle for each row
- Approximately once every 1ms
- Sqrt(n) cycles
- Handled in background by memory controller

Inefficient Way to Get a Single Bit

- Effectively read entire row of Sqrt(n) bits

Enhanced Performance DRAMs

Conventional Access

- **Row + Col**
- **RAS CAS RAS CAS ...**

Page Mode

- **Row + Series of columns**
- **RAS CAS CAS CAS ...**
- **Gives successive bits**

Other Acronyms

- **EDORAM**
  - "Extended data output"
- **SDRAM**
  - "Synchronous DRAM"

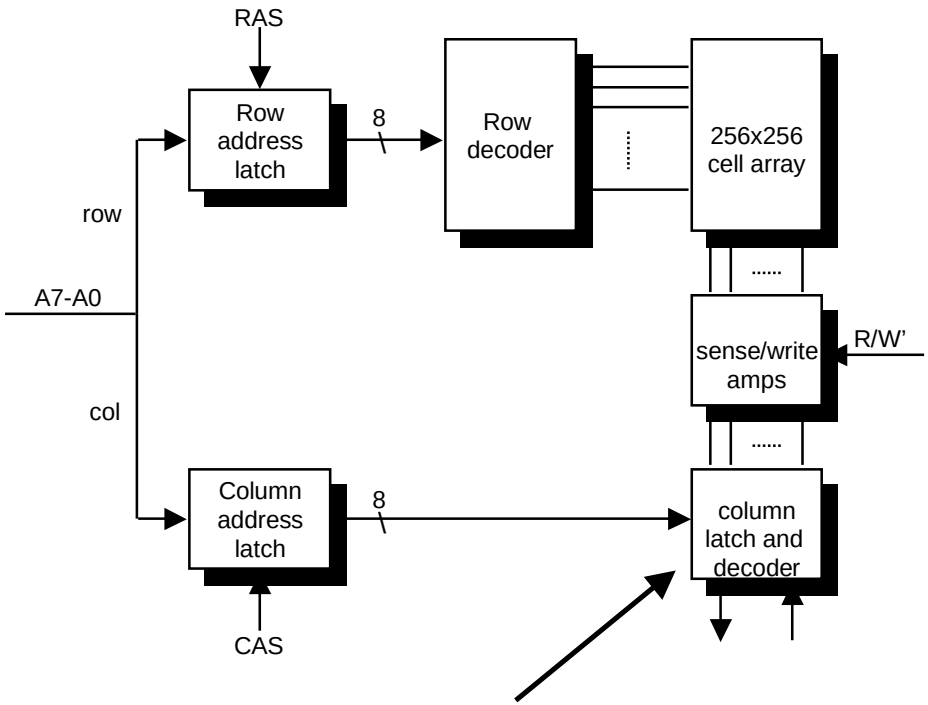

Entire row buffered here

Typical Performance

row access time	col access time	cycle time	page mode cycle time
50ns	10ns	90ns	25ns

Video RAM

Performance Enhanced for Video / Graphics Operations

- **Frame buffer to hold graphics image**

Writing

- **Random access of bits**
- **Also supports rectangle fill operations**
  - Set all bits in region to 0 or 1

Reading

- **Load entire row into shift register**
- **Shift out at video rates**

Performance Example

- **1200 X 1800 pixels / frame**
- **24 bits / pixel**
- **60 frames / second**
- **2.8 GBits / second**

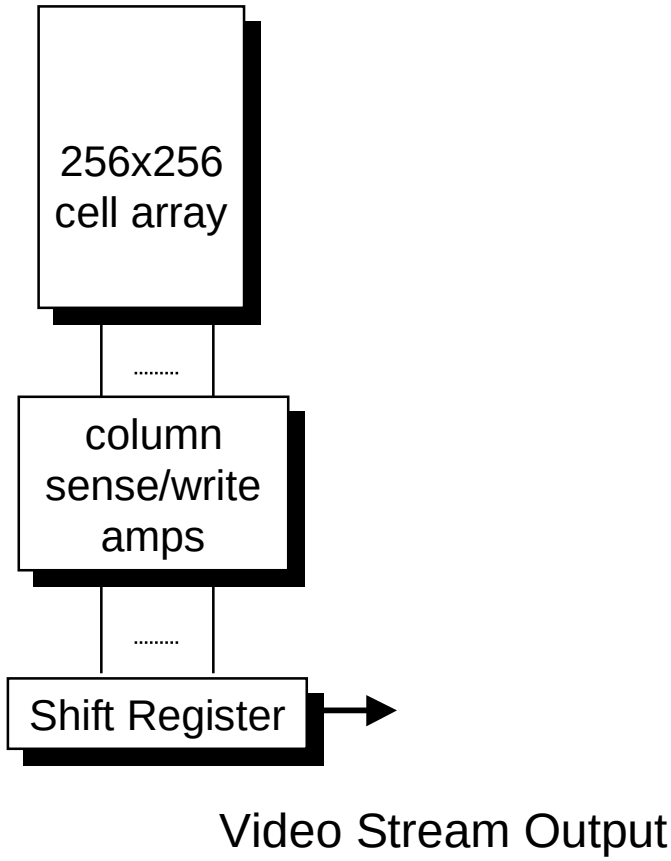

DRAM Driving Forces

Capacity

- **4X per generation**
  - Square array of cells
- **Typical scaling**
  - Lithography dimensions 0.7X
    - » Areal density 2X
  - Cell function packing 1.5X
  - Chip area 1.33X
- **Scaling challenge**
  - Typically $C_{node} / C_{BL} = 0.1–0.2$
  - Must keep C_{node} high as shrink cell size

Retention Time

- **Typically 16–256 ms**
- **Want higher for low-power applications**

DRAM Storage Capacitor

Planar Capacitor

- Up to 1Mb
- C decreases linearly with feature size

Trench Capacitor

- 4 Mb –1 Gb
- Lining of hole in substrate

Stacked Cell

- ≥ 1Gb
- On top of substrate
- Use high ε dielectric

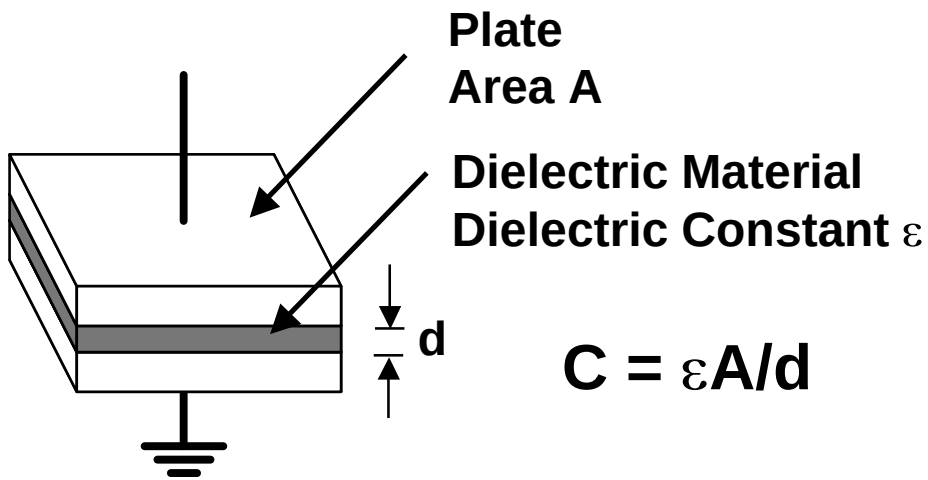

$$C = \varepsilon A/d$$

Trench Capacitor

Process

- **Etch deep hole in substrate**
  - ~5 µm deep
  - ~0.5 µm diameter
  - Becomes reference plate
- **Grow oxide on walls**
  - Dielectric
- **Fill with polysilicon plug**
  - Tied to storage node

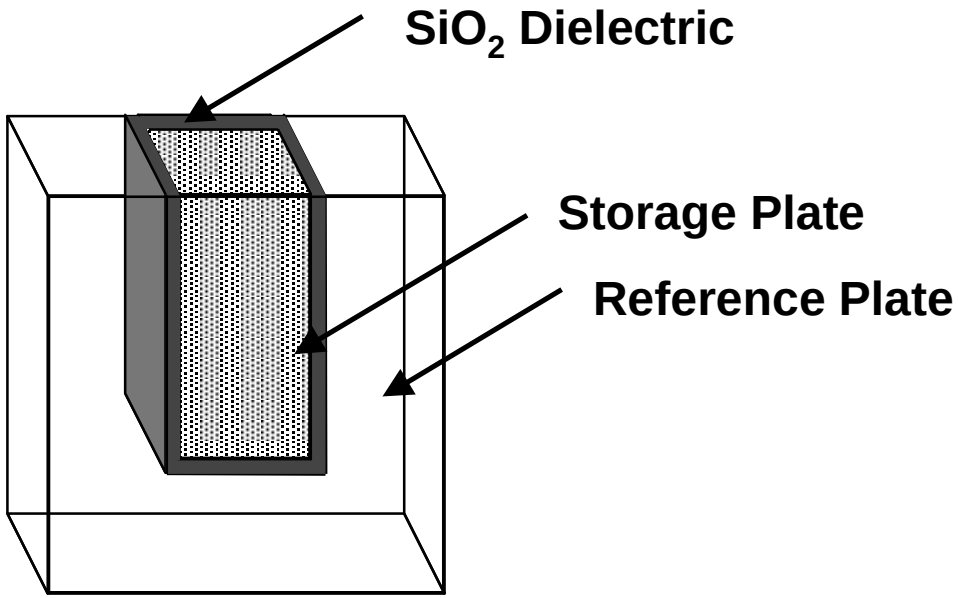

IBM DRAM Cell

- **IBM J. R&D, Jan/Mar '95**
- **Evolution from 4 – 256 Mb**

4 Mb Cell Structure

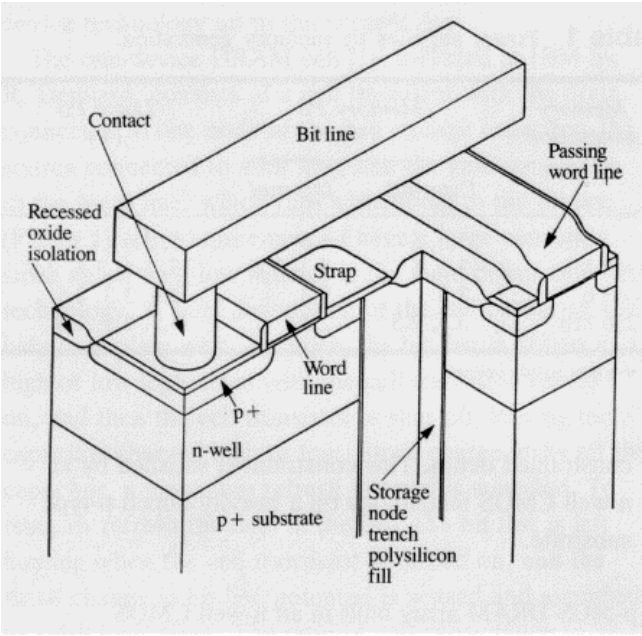

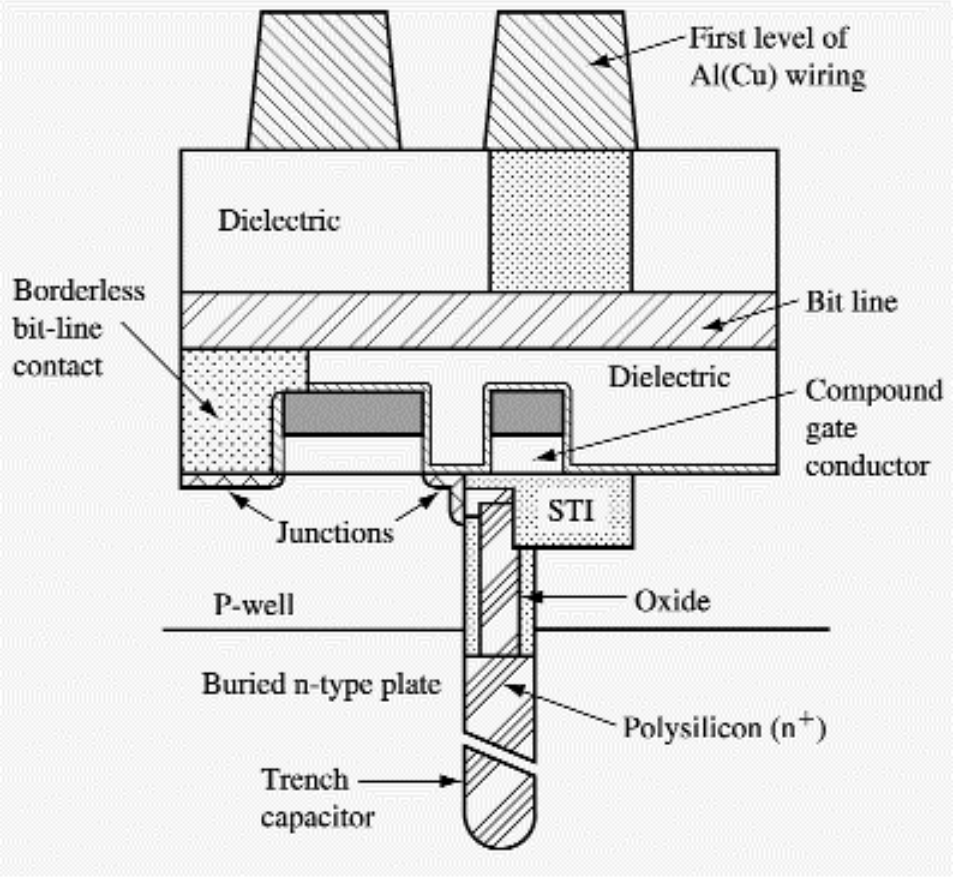

IBM DRAM Evolution

- **IBM J. R&D, Jan/Mar '95**
- **Evolution from 4 – 256 Mb**
- **256 Mb uses cell with area 0.6 μm^2**

Cell Layouts

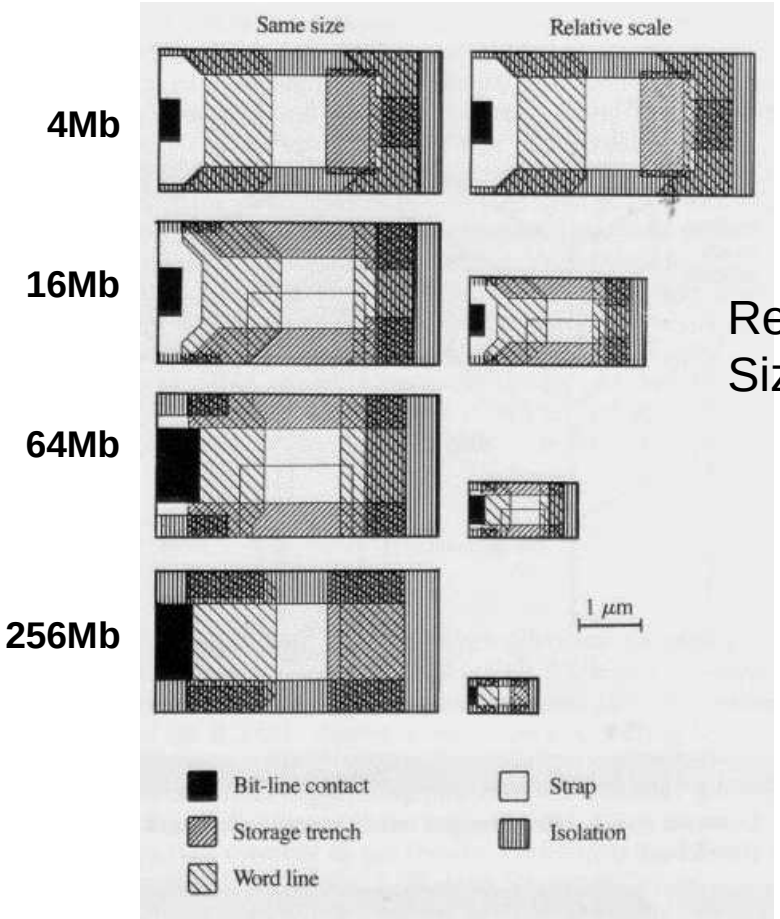

Relative Sizes

Mitsubishi Stacked Cell DRAM

- **IEDM '95**
- **Claim suitable for 1 – 4 Gb**

Technology

- **0.14 µm process**
- **8 nm gate oxide**
- **0.29 µm^2 cell**

Storage Capacitor

- **Fabricated on top of everything else**
- **Rubidium electrodes**
- **High dielectric insulator**
  - 50X higher than SiO_2
  - 25 nm thick
- **Cell capacitance 25 femtofarads**

Cross Section of 2 Cells

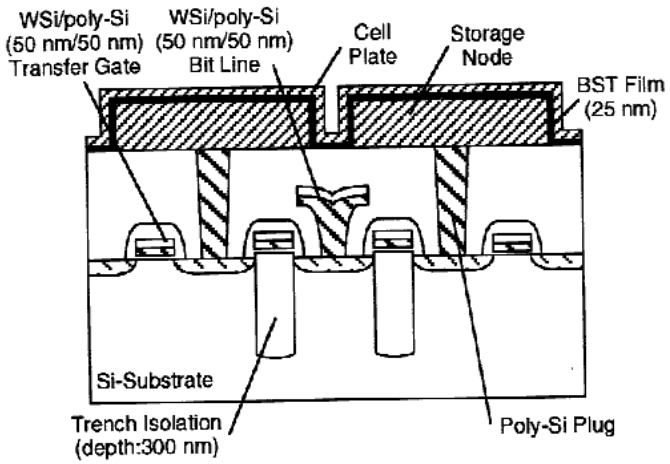

Fig. 2 Schematic cross-sectional view of DRAM memory cells with Ru/BST/Ru stacked capacitors.

Mitsubishi DRAM Pictures

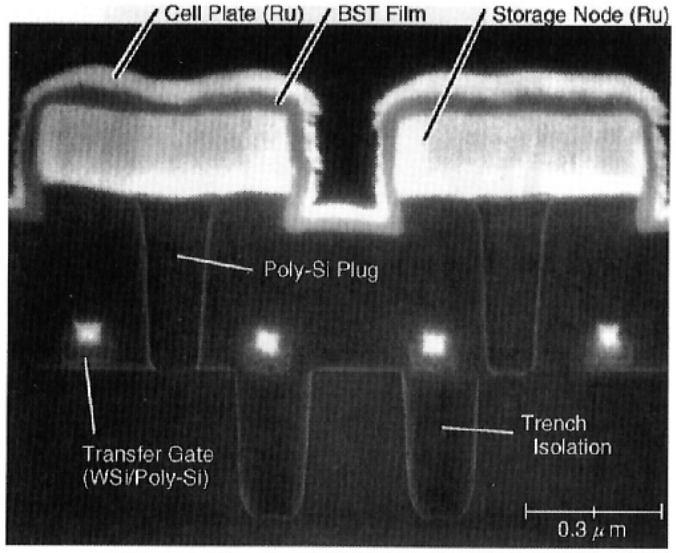

Fig. 3 SEM cross-sectional photograph of the fabricated 0.29-μm² memory cell with Ru/BST/Ru stacked capacitor. The facet was fabricated by focused ion beam etching.

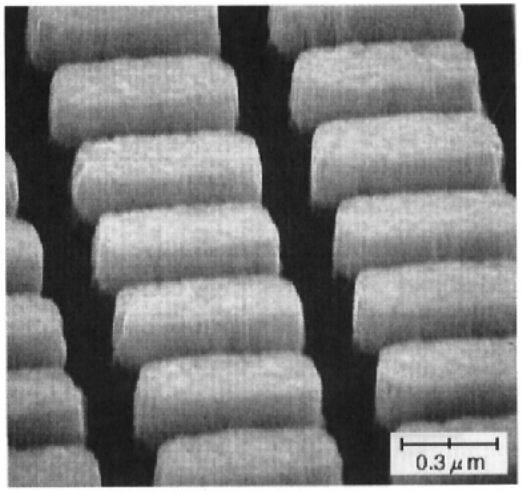

Fig. 8 SEM photograph of a Ru-metal storage node array with a projection l a height of 0.2 μm.

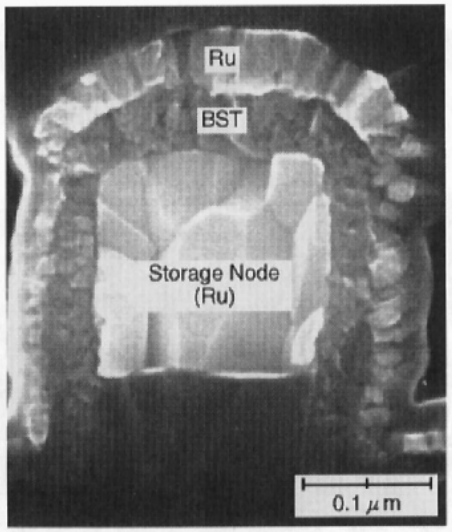

Fig. 10 SEM cross-sectional view of a Ru/BST/Ru capacitor cell. The facet shown is a cleaved facet.

Magnetic Disks

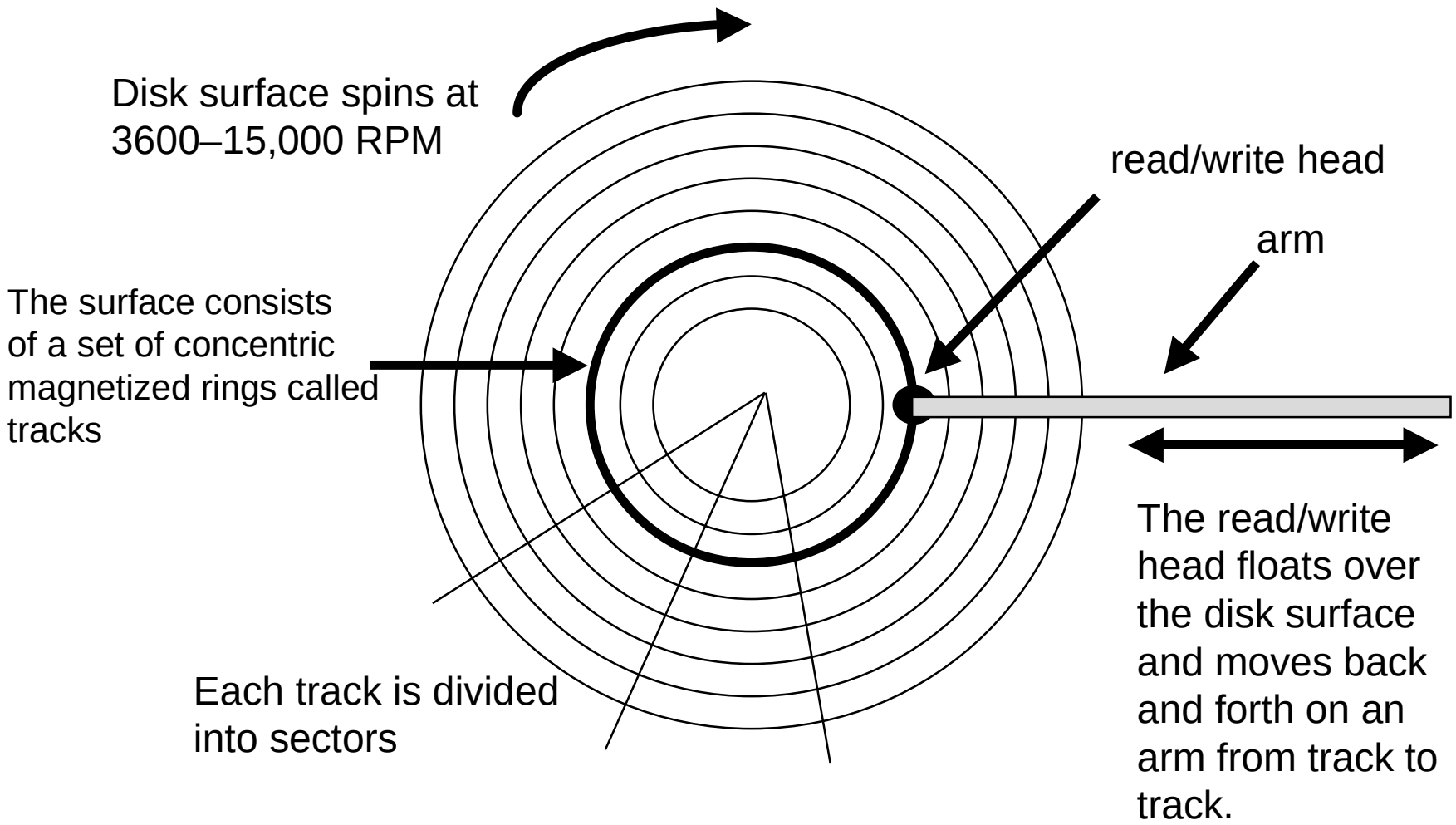

Disk Capacity

Parameter	18GB Example
• Number Platters	12
• Surfaces / Platter	2
• Number of tracks	6962
• Number sectors / track	213
• Bytes / sector	512
Total Bytes	**18,221,948,928**

Disk Operation

Operation

- **Read or write complete sector**

Seek

- **Position head over proper track**
- **Typically 6-9ms**

Rotational Latency

- **Wait until desired sector passes under head**
- **Worst case: complete rotation**

  10,025 RPM $\Rightarrow$ 6 ms

Read or Write Bits

- **Transfer rate depends on # bits per track and rotational speed**
- **E.g., 213 * 512 bytes @10,025RPM = 18 MB/sec.**
- **Modern disks have external transfer rates of up to 100 MB/sec**

Disk Performance

Getting First Byte

- **Seek + Rotational latency = 7,000 – 19,000 µsec**

Getting Successive Bytes

- **~ 0.06 µsec each**
  - *roughly 100,000 times faster than getting the first byte!*

Optimizing Performance:

- **Large block transfers are more efficient**
- **Try to do other things while waiting for first byte**
  - switch context to other computing task
  - processor is interrupted when transfer completes

Disk / System Interface

1. Processor Signals Controller

- **Read sector X and store starting at memory address Y**

2. Read Occurs

- **"Direct Memory Access" (DMA) transfer**
- **Under control of I/O controller**

3. I/O Controller Signals Completion

- **Interrupts processor**
- **Can resume suspended process**

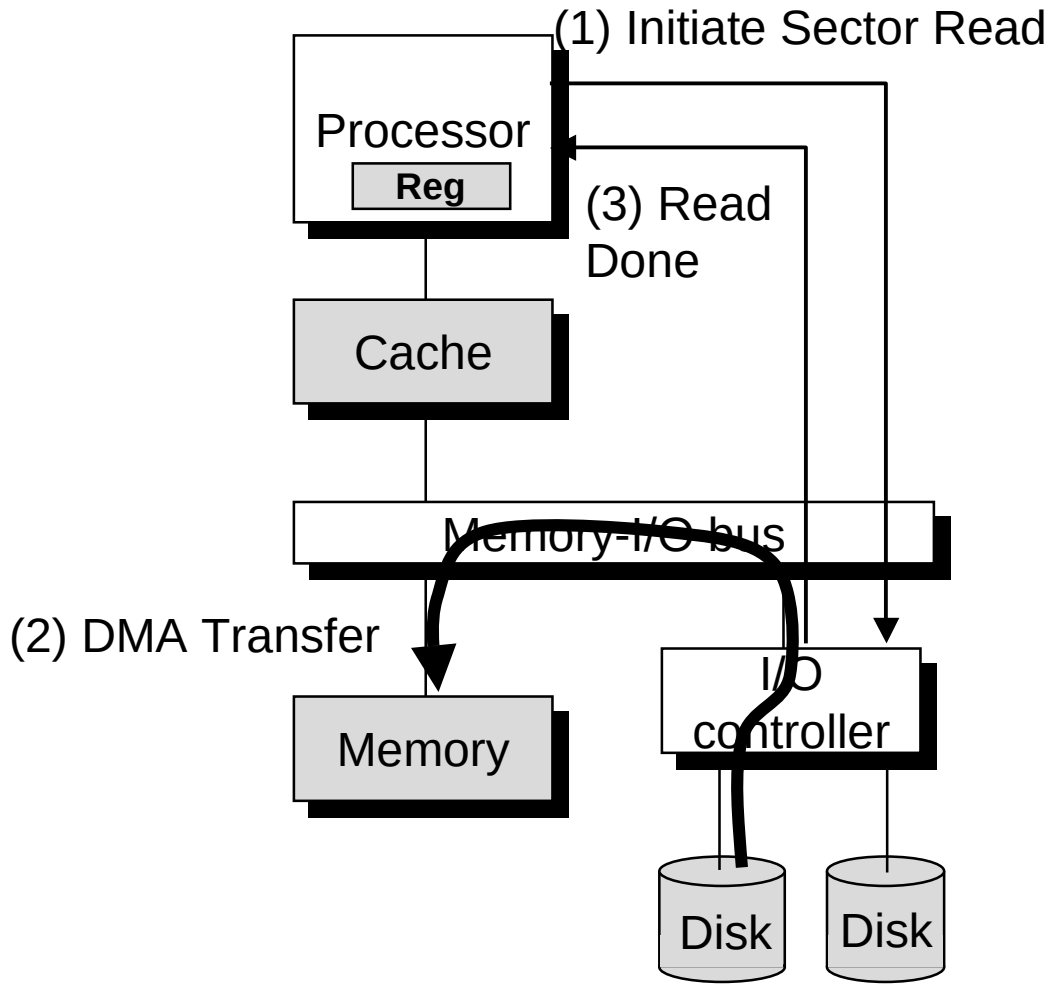

Magnetic Disk Technology

Seagate ST-12550N Barracuda 2 Disk

• **Linear density**	**52,187.**	**bits per inch (BPI)**
– Bit spacing	0.5	µm
– Track density	3,047.	tracks per inch (TPI)
– Track spacing	8.3	µm
• **Total tracks**	**2,707.**	**tracks**
• **Rotational Speed**	**7200.**	**RPM**
• **Avg Linear Speed**	**86.4**	**kilometers / hour**
• **Head Floating Height**	**0.13**	**microns**

Analogy:

- **put the Sears Tower on its side**
- **fly it around the world, *2.5cm* above the ground**
- **each complete orbit of the earth takes *8 seconds***

CD Read Only Memory (CDROM)

Basis

- **Optical recording technology developed for audio CDs**
  - 74 minutes playing time
  - 44,100 samples / second
  - 2 X 16-bits / sample (Stereo)

  $\Rightarrow$ Raw bit rate = 172 KB / second
- **Add extra 288 bytes of error correction for every 2048 bytes of data**
  - Cannot tolerate any errors in digital data, whereas OK for audio

Bit Rate

- **172 * 2048 / (288 + 2048) = 150 KB / second**
  - For 1X CDROM
  - *N* X CDROM gives bit rate of *N* * 150
  - E.g., 12X CDROM gives 1.76 MB / second

Capacity

- **74 Minutes * 150 KB / second * 60 seconds / minute = 650 MB**

Storage Trends

SRAM

metric	1980	1985	1990	1995	2000	***2000:1980***
$/MB	19,200	2,900	320	256	100	***190***
access (ns)	300	150	35	15	2	***100***

DRAM

metric	1980	1985	1990	1995	2000	***2000:1980***
$/MB	8,000	880	100	30	1.5	***5,300***
access (ns)	375	200	100	70	60	***6***
typical size(MB)	0.064	0.256	4	16	64	***1,000***

Disk

metric	1980	1985	1990	1995	2000	***2000:1980***
$/MB	500	100	8	0.30	0.05	***10,000***
access (ms)	87	75	28	10	8	***11***
typical size(MB)	1	10	160	1,000	9,000	***9,000***

(Culled from back issues of Byte and PC Magazine)

Storage Price: $/MByte

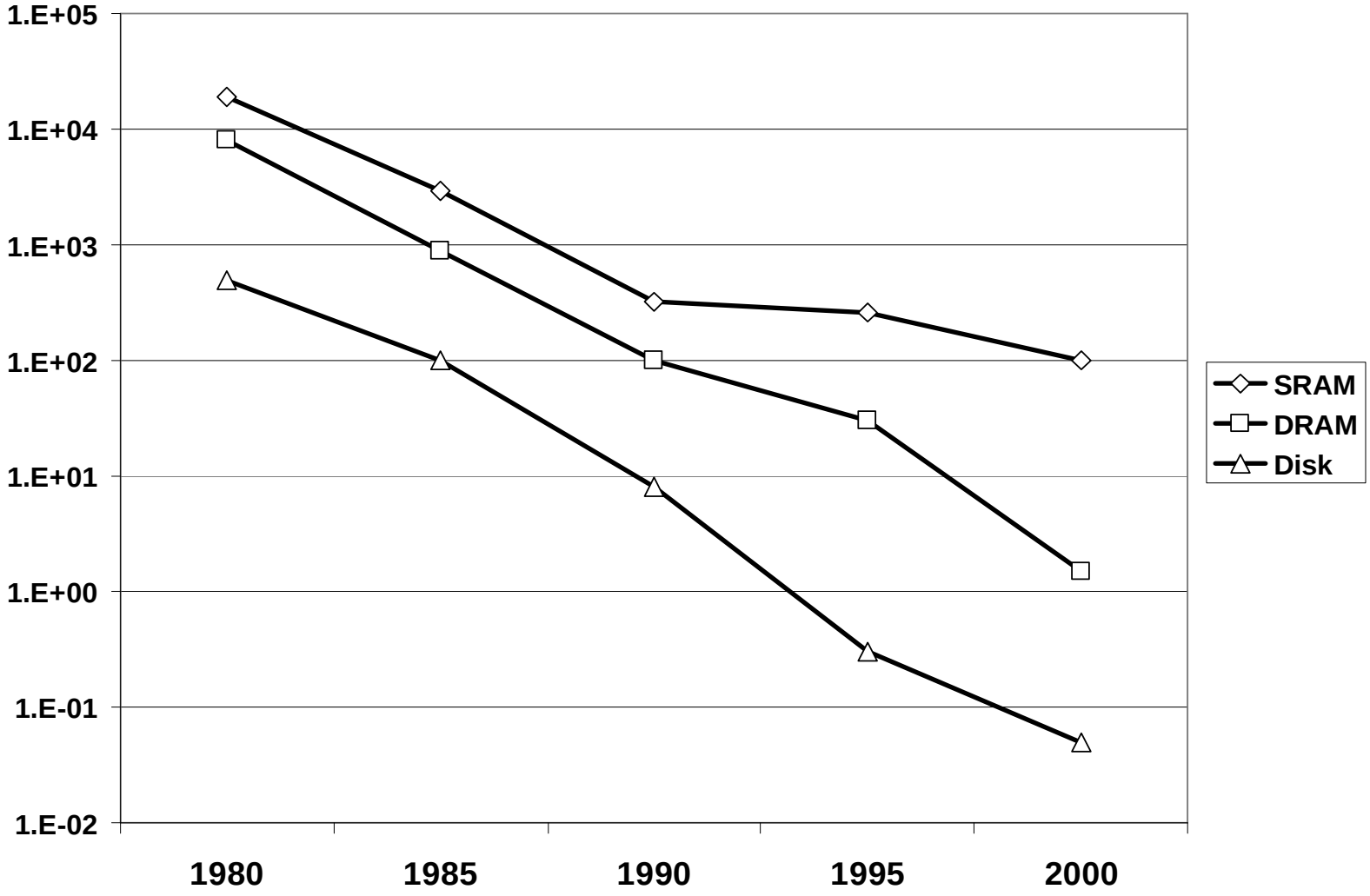

Storage Access Times (nsec)

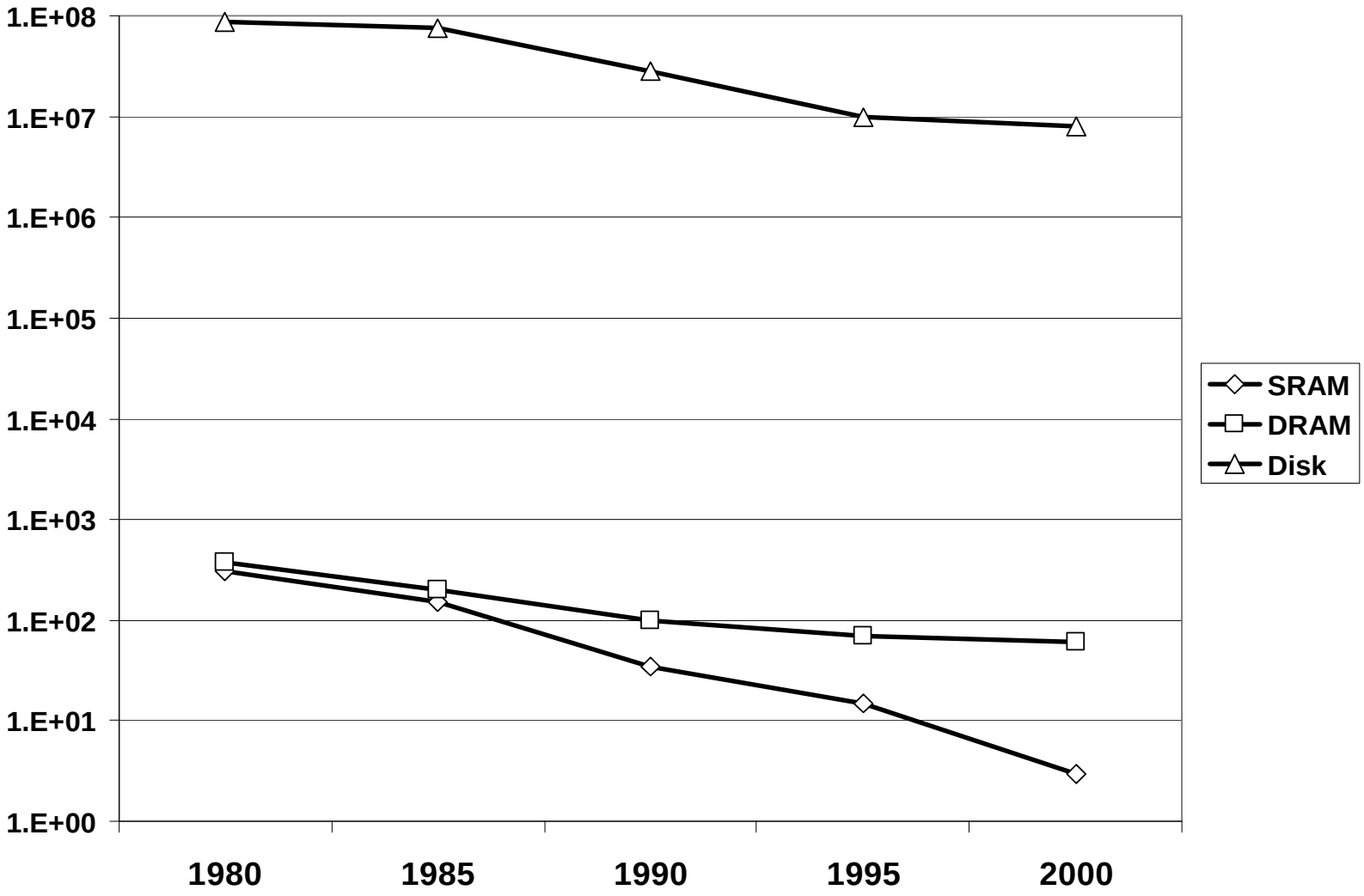

Processor clock rates

Processors

metric	1980	1985	1990	1995	2000	***2000:1980***
typical clock(MHz)	1	6	20	150	750	**750**
processor	8080	286	386	Pentium	P-III	

culled from back issues of Byte and PC Magazine

The CPU vs. DRAM Latency Gap (ns)

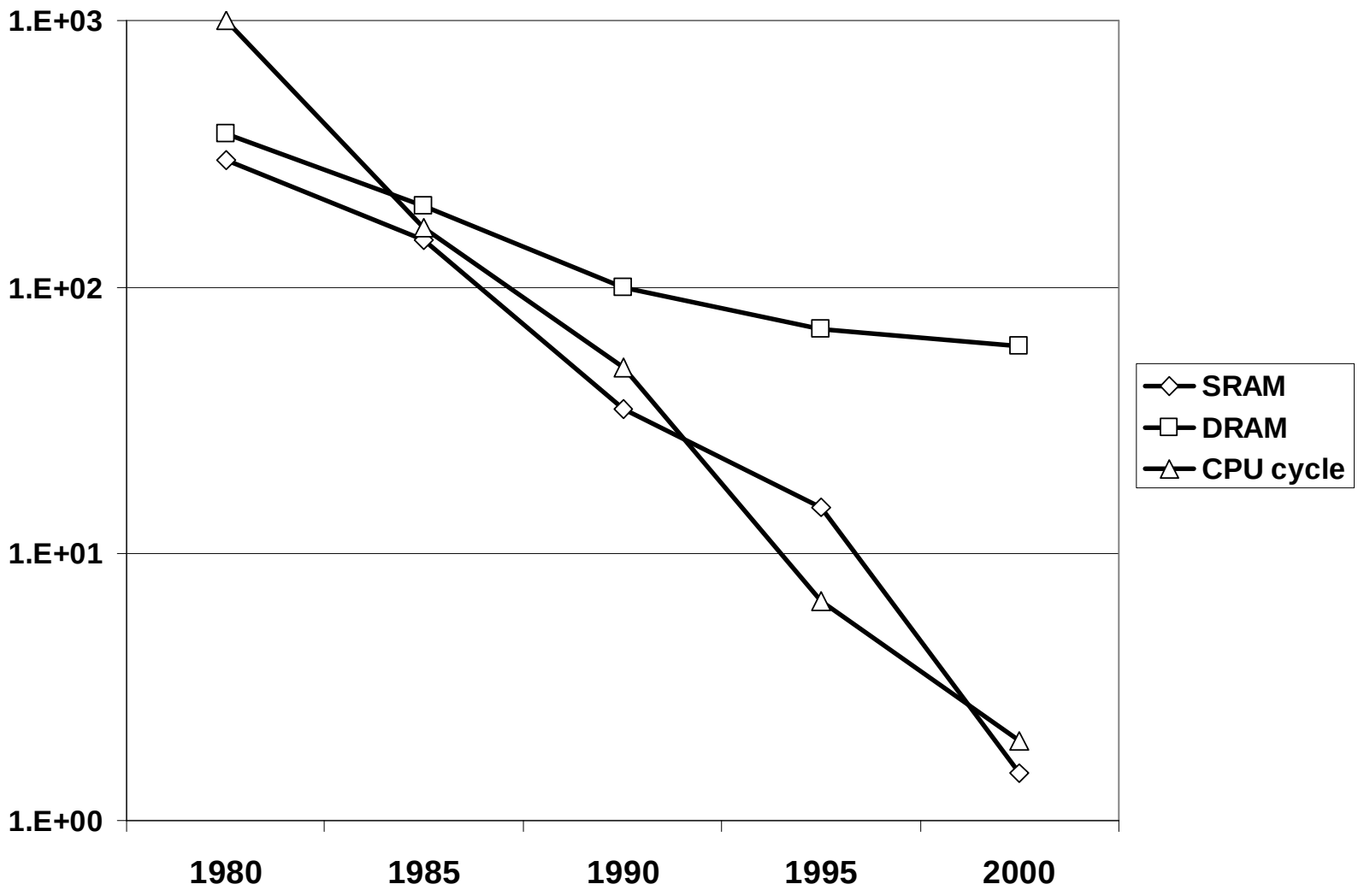

Memory Technology Summary

Cost and Density Improving at Enormous Rates

Speed Lagging Processor Performance

Memory Hierarchies Help Narrow the Gap:

- **Small fast SRAMS (cache) at upper levels**
- **Large slow DRAMS (main memory) at lower levels**
- **Incredibly large & slow disks to back it all up**

Locality of Reference Makes It All Work

- **Keep most frequently accessed data in fastest memory**